42 BOBBER

PARTS CATALOGUE

REV-04

EURO-5/5+



INDEX

INSTRUCTION

PAGE: A TO B

PICTORIAL INDEX

PAGE: C TO D : ENGINE GROUP

PAGE: E TO H : FRAME GROUP

ENGINE GROUP

PAGE NO : 01 TO 36

FRAME GROUP

PAGE NO : 37 TO 112

PART NUMBER INDEX

PAGE: -- TO --

SPARE PART CATALOGUE PART NO: XXXXXXXXXXXX

How to use the Spare Parts Catalogue

This parts catalogue is compiled of all service items of **JAWA 42 BOBBER EURO_V** incorporates parts changes introduced upto Date .....

How to order parts

1. Always specify the part numbers when ordering a part.
2. Always check the models, type, serial numbers, color, make and the size as needed before placing the order of parts.
3. Required quantity to be specified.

Revision in part numbers

New parts are introduced when old parts are deleted & or when when modification are incorporated in parts or part assembly. Such changes are notified by change of parts numbers.
The information regarding change of part numbers is informed through parts news, which you are requested to note & update into your "Parts Catalogue" & in your "Price List" also with effective date of introduction.
This updation into "Part Catalogue" & "Price List" will help you in procurement / stocking / billing & in turn will give better service to the customer.

How to refer with the part information

Reference with "Illustrated Index"
Reference with "Part Number Index"

How to use the Flat Rate Time (F.R.T.)

This F.R.T. (Flat Rate Time) is used to determine the standard labour time allowed for replacement of parts covered by the warranty during the period of warranty is in effect. The F.R.T. for those parts, that are not listed herein, should be determined from the operation closely related to the replacement of the part.

1.The F.R.T. is based on the following servicing conditions

a) A liberal allowance is added to the net servicing time.
b) Standard time specified are based on the conditions that the usgae of necessary servicing tools listed in the service manual & the work performed by a technician with normal skill.
c) Time required for inspection & operational test following the servicing is included in the F.R.T.

2. Methods of computing

The job time are listed in tenth of hour to simplify complication
Examples: 1) 0.3 = 18 minutes
2) 5.1 = 5 hour & 6 minutes

CONVERSION CHART			
HOUR	MINUTES	HOUR	MINUTES
0.1	6	0.6	36
0.2	12	0.7	42
0.3	18	0.8	48
0.4	24	0.9	54
0.5	30	1.0	60

3. Computing the F.R.T.

Following are the examples when several jobs are performed at the same time. Make the calculations in the following manner

a) Jobs of non-duplicated nature.

The F.R.T. for the job is obtained by totaling the F.R.T. for each part replaced.

Example: 1. Replacement of Clutch Housing Assembly
2. Magneto Rotor

SERVICE ITEM	F.R.T.
CLUTCH HOUSING ASSY	1
MAGNETO ROTOR	0.3

F.R.T. for the Job is 1 + 0.3 = 1.3

b) Jobs of duplicated nature.

Take the F.R.T. for the last part to be replaced

Example: Replacement of Crankshaft Assy & Cylinder Block

SERVICE ITEM	F.R.T.
CRANKSHAFT ASSEMBLY	4.2
CYLINDER BLOCK	3.4

F.R.T. for the Job is = 4.2

4. Operation Other than replacing parts

(1) Removal and Installation

No	Service Item	F.R.T.
1	ENGINE REMOVAL & INSTALLATION	2.5
2	CYLINDER HEAD ASSEMBLY (INCLUDE ENGINE REMOVAL & INSTALLATION)	3.0
3	THROTTLE BODY ASSEMBLY REMOVAL & INSTALLATION	1.0
4	CRANKCASE SEPARATION (INCLUDE ENGINE REMOVAL & INSTALLATION)	4.0
5	RADIATOR ASSEMBLY REMOVAL & INSTALLATION	1.0

(2) Adjustment

No	Service Item	F.R.T.
1	CLUTCH - ADJUSTMENT (INCLUDE CLUTCH LEVER ADJUSTMENT)	0.1
2	HEADLIGHT - AIMING	0.1
3	SPARK PLUG - ADJUSTMENT & CLEANING	0.6
4	DRIVE CHAIN - ADJUSTMENT	0.1
5	THROTTLE OPERATION - ADJUSTMENT	0.1
6	TAPPET - ADJUSTMENT	1.2
7	ENGINE OIL LEVEL INSPECTION, DRAIN & TOP UP	0.6

(3) Inspection & Measurement

No	Service Item	F.R.T.
1	COMPRESSION PRESSURE - MEASUREMENT	0.6
2	IGNITION TIMING - INSPECTION	0.5

(4) Other work

No	Service Item	F.R.T.
1	OIL STRAINER - CLEANING	0.6
2	CLEANER ELEMENT - CLEANING	0.3
3	FRONT BRAKE - AIR BLEEDING	0.3
4	REAR BRAKE - AIR BLEEDING	0.1
5	RADIATOR COOLANT - CHANGE	0.5

Method of calculating Labour Charges (Example):

Labour charges rate: Rs 100/- per man hour

Example: Tappet Adjustment F.R.T. is 1.2

Labour charges = F.R.T. x Labour Rate

For all cities : 1.2 x 100 = Rs. 120/-

Pictorial Index

CAMCHAIN & TENSIONER, CYLINDER HEAD COVER	ASSY. NO.1
	PAGE NO.1

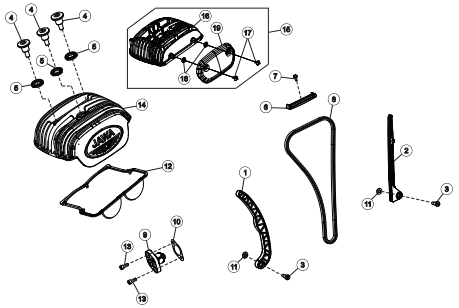

CRANKCASE LH	ASSY. NO.2
	PAGE NO.3

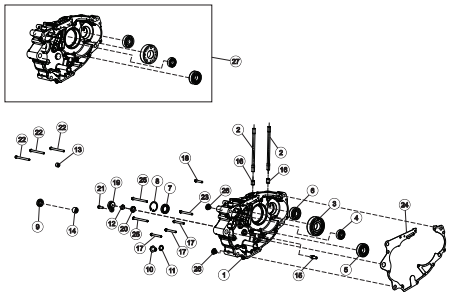

CRANKCASE RH	ASSY. NO.3
	PAGE NO.5

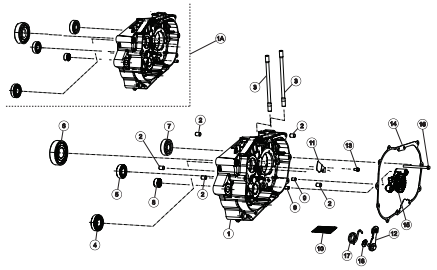

CYLINDER HEAD EXPLOSION	ASSY. NO.4
	PAGE NO.7

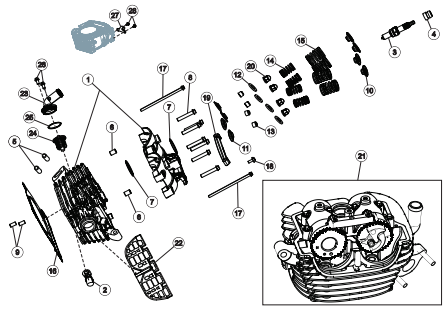

DRUM ASM & SHIFT SHAFT MECH CAMBINE	ASSY. NO.5
	PAGE NO.9

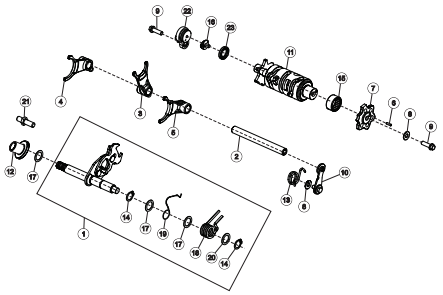

MAGNETO ASSEMBLY	ASSY. NO.6
	PAGE NO.11

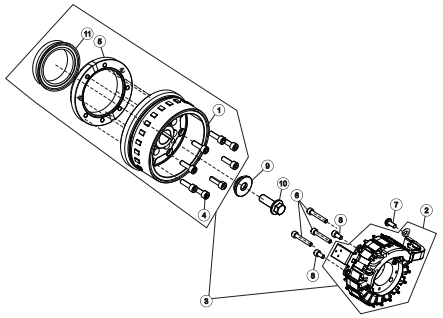

STARTING SYSTEM & STARTER MOTOR	ASSY. NO.7
	PAGE NO.13

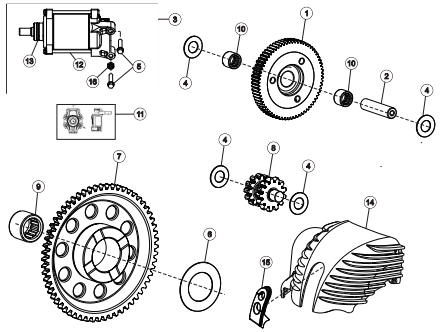

VALVE TRAIN AND CAM SHAFT	ASSY. NO.8
	PAGE NO.15-19

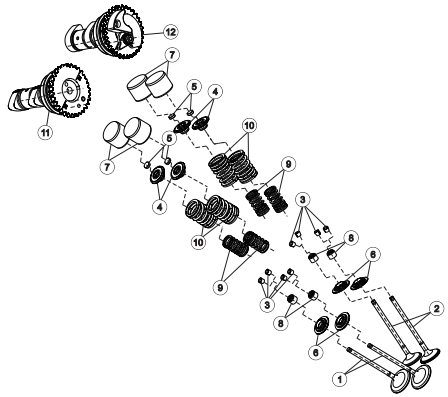

Pictorial Index

BALANCER SHAFT ASSEMBLY	ASSY. NO.9
	PAGE NO.21

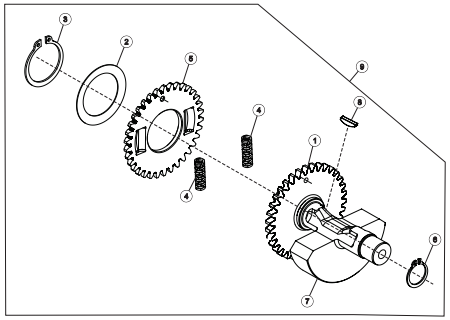

TRANSMISSION SYSTEM	ASSY. NO.10
	PAGE NO.23,25

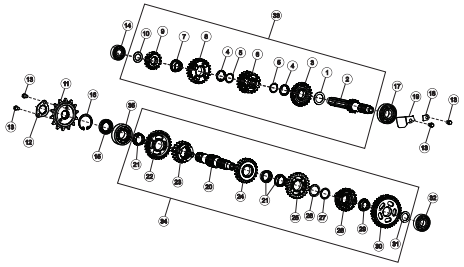

MAGNETO COVER LH	ASSY. NO.13
	PAGE NO.33

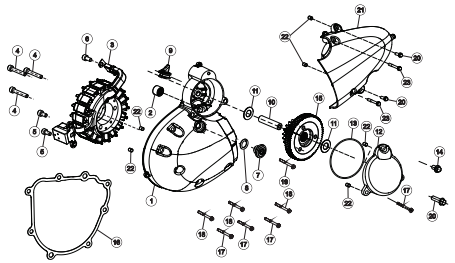

CLUTCH ASSEMBLY	ASSY. NO.14
	PAGE NO.35

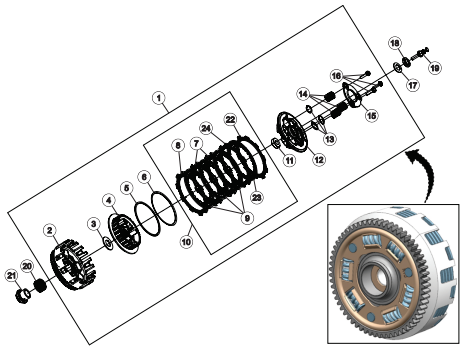

R CRANKCASE COVER	ASSY. NO.11
	PAGE NO.27,29

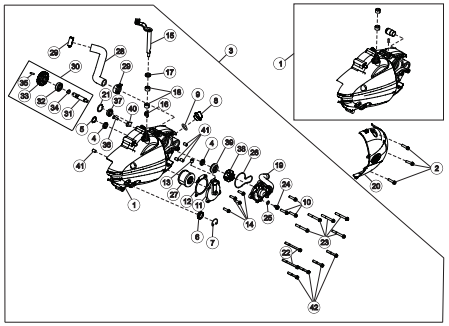

CRANKSHAFT AND PISTON	ASSY. NO.12
	PAGE NO.31

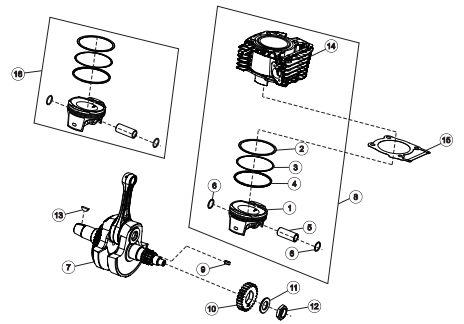

	ASSY. NO.
	PAGE NO.

	ASSY. NO.
	PAGE NO.

Pictorial Index

EVAPORATIVE EMISSION SYSTEM	ASSY. NO.15
	PAGE NO.37

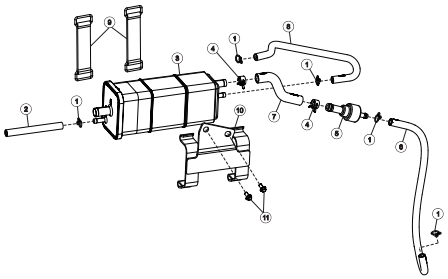

AIR FILTER ASSEMBLY	ASSY. NO.16
	PAGE NO.39

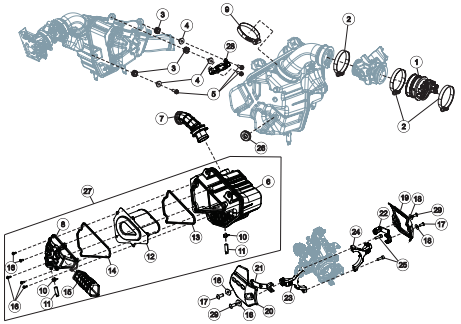

ANTI-LOCK BRAKING SYSTEM (ABS)	ASSY. NO.19
	PAGE NO.47

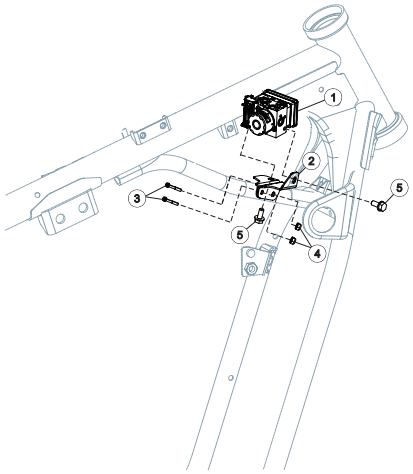

FRONT WHEEL ASSEMBLY	ASSY. NO.20
	PAGE NO.49

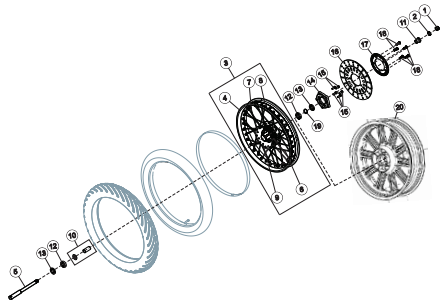

BRAKE SYSTEM FRONT	ASSY. NO.17
	PAGE NO.42

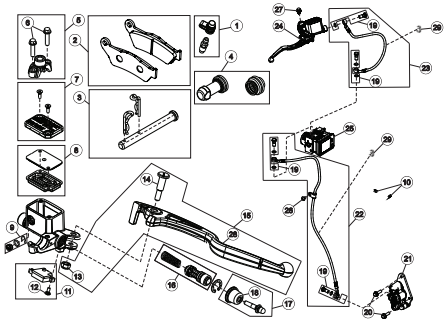

BRAKE SYSTEM REAR	ASSY. NO.18
	PAGE NO.43,45

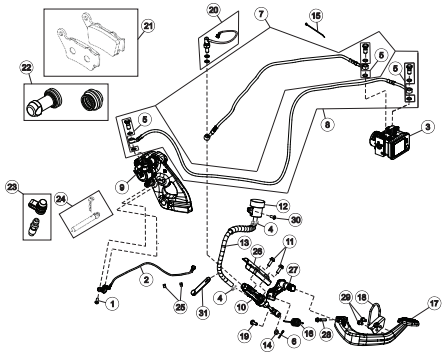

FUEL TANK ASSEMBLY	ASSY. NO.21
	PAGE NO.51,53

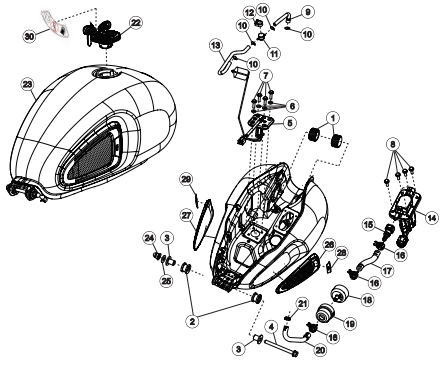

FRONT MUDGUARD ASSEMBLY	ASSY. NO.22
	PAGE NO.55

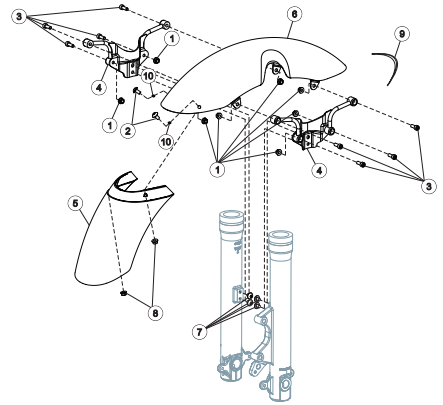

Pictorial Index

RADIATOR	ASSY. NO.23
	PAGE NO.57

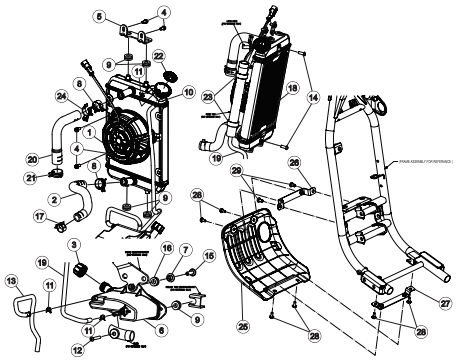

REAR FENDER ASSEMBLY (1/2)	ASSY. NO.24
	PAGE NO.59

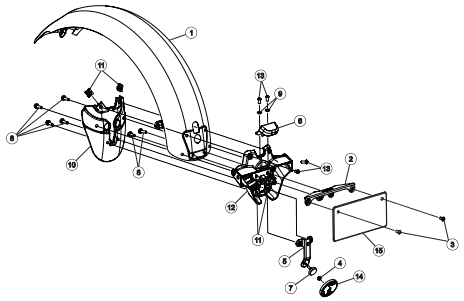

SEAT ASSEMBLY	ASSY. NO.27
	PAGE NO.67

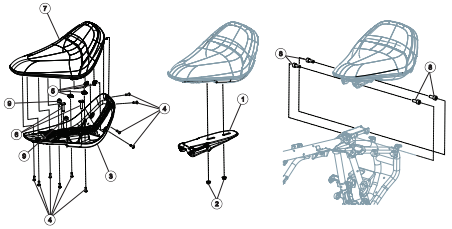

SILENCER ASSEMBLY	ASSY. NO.28
	PAGE NO.69

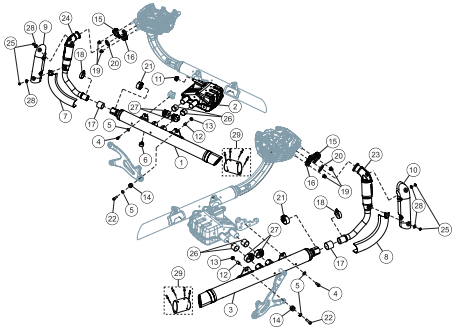

REAR FENDER ASSEMBLY (2/2)	ASSY. NO.25
	PAGE NO.61

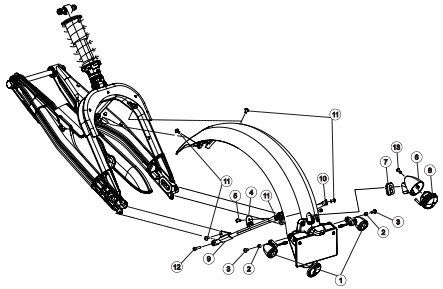

REAR WHEEL ASSEMBLY	ASSY. NO.26
	PAGE NO.63,65

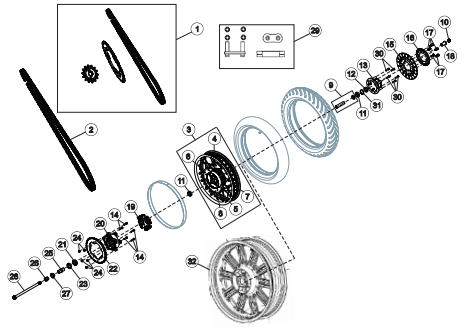

SILENCER ASSEMBLY OBD-II PHASE-2_EURO-5+	ASSY. NO.29
	PAGE NO.71

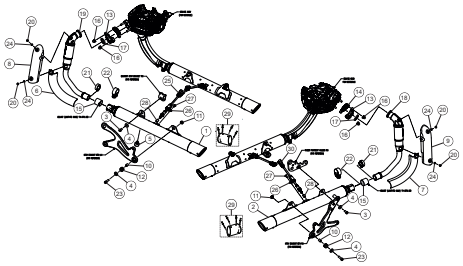

STEERING	ASSY. NO.30
	PAGE NO.73

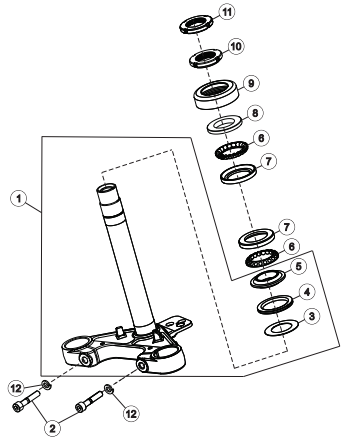

Pictorial Index

FRONT FORK ASSEMBLY	ASSY. NO.31
	PAGE NO.75

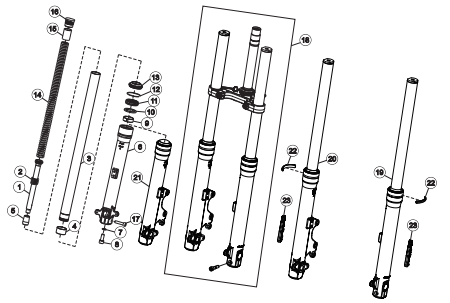

FRONT FORK MOUNTINGS	ASSY. NO.32
	PAGE NO.77

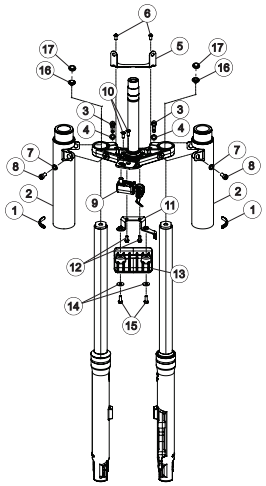

SIDE PANEL LH & RH ASSY / ECU & RELAY / FUSEBOX	ASSY. NO.35
	PAGE NO.83,85

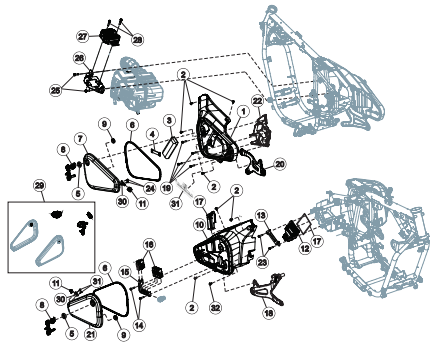

FRAME ASSEMBLY & FRAME MOUNTINGS	ASSY. NO.36
	PAGE NO.87

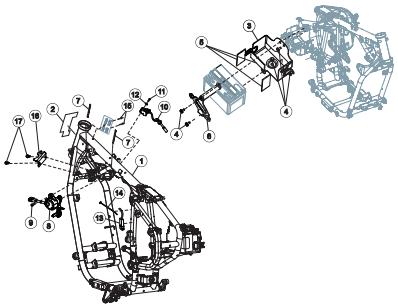

FAIRING ASSEMBLY (1/2)	ASSY. NO.33
	PAGE NO.79

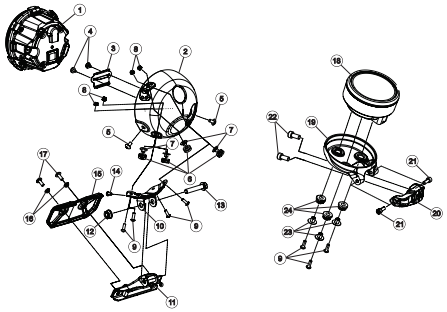

FAIRING ASSEMBLY (2/2)	ASSY. NO.34
	PAGE NO.81

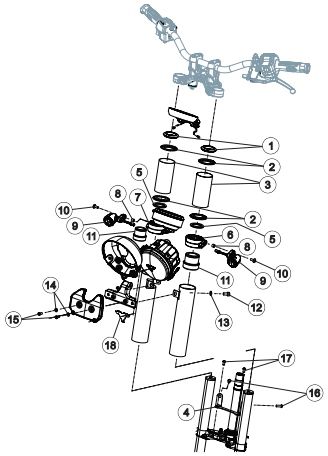

FOOTREST ASSEMBLY LH & RH	ASSY. NO.37
	PAGE NO.89

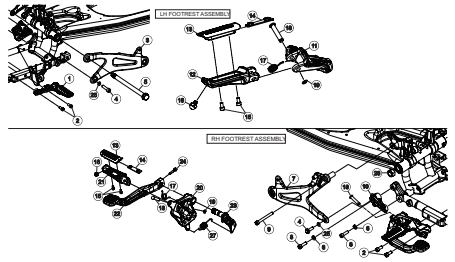

ENGINE MOUNTING SYSTEM GEAR SHIFT LEVER ASSLY	ASSY. NO.38
	PAGE NO.91

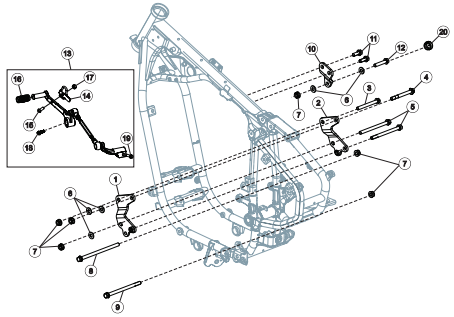

Pictorial Index

HANDLE BAR ASSEMBLY	ASSY. NO.39
	PAGE NO.93,95

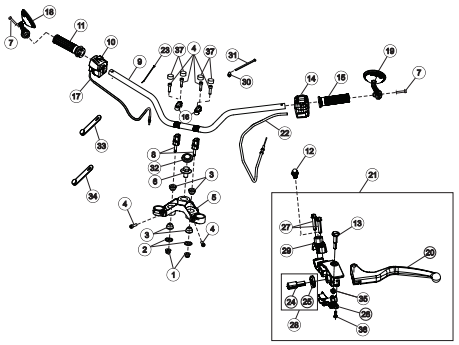

SWING ARM ASSEMBLY / REAR SHOCK ABSORBER / SIDE STAND ASSEMBLY	ASSY. NO.40
	PAGE NO.97,99

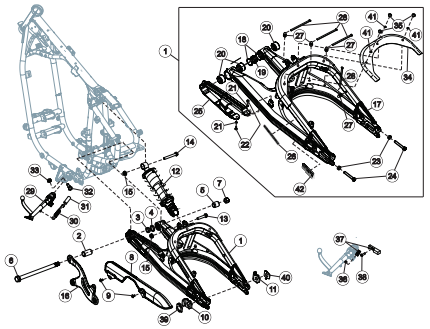

ELECTRONIC FUEL INJECTION (EFI) ASSEMBLY	ASSY. NO.43
	PAGE NO.105

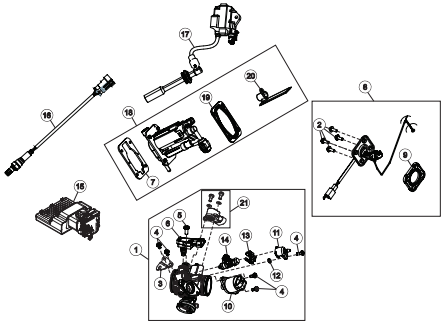

DECALS	ASSY. NO.44
	PAGE NO.107

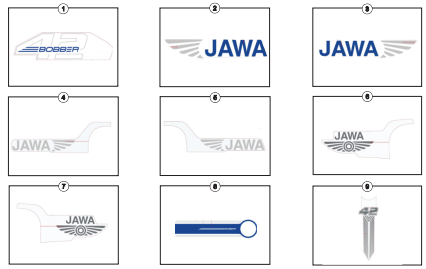

ELECTRICAL COMPONENTS MOUNTING ON FRAME & HANDLE BAR	ASSY. NO.41
	PAGE NO.101

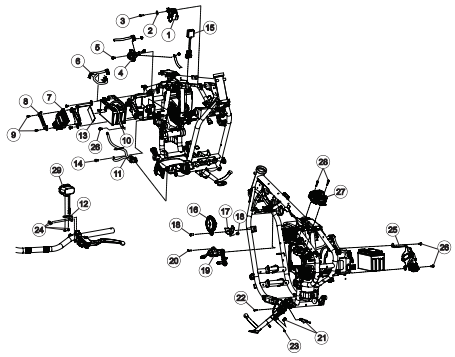

WIRING HARNESS & BATTERY WITH STARTER RELAY AND RELAY CORDSET	ASSY. NO.42
	PAGE NO.103

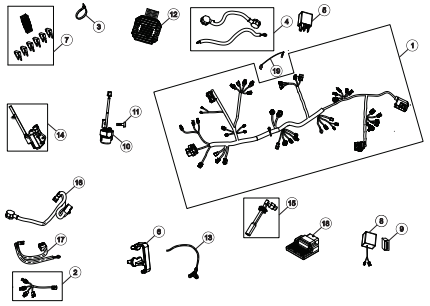

DECALS	ASSY. NO.45
	PAGE NO.109

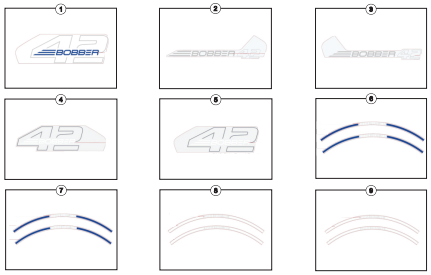

DECALS	ASSY. NO.46
	PAGE NO.111

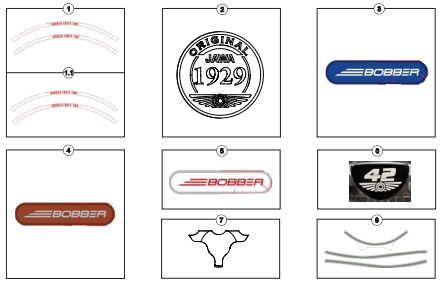

Pictorial Index

DECALS - UG	ASSY. NO.47
	PAGE NO.113

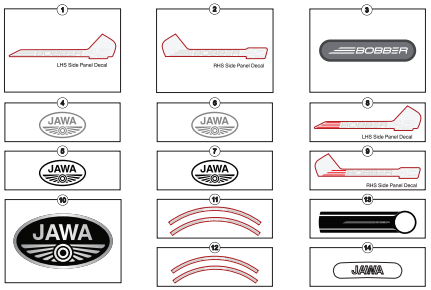

	ASSY. NO.
	PAGE NO.

	ASSY. NO.
	PAGE NO.

	ASSY. NO.
	PAGE NO.

	ASSY. NO.
	PAGE NO.

	ASSY. NO.
	PAGE NO.

	ASSY. NO.
	PAGE NO.

1 CAMCHAIN AND TENSIONER & CYLINDER HEAD COVER

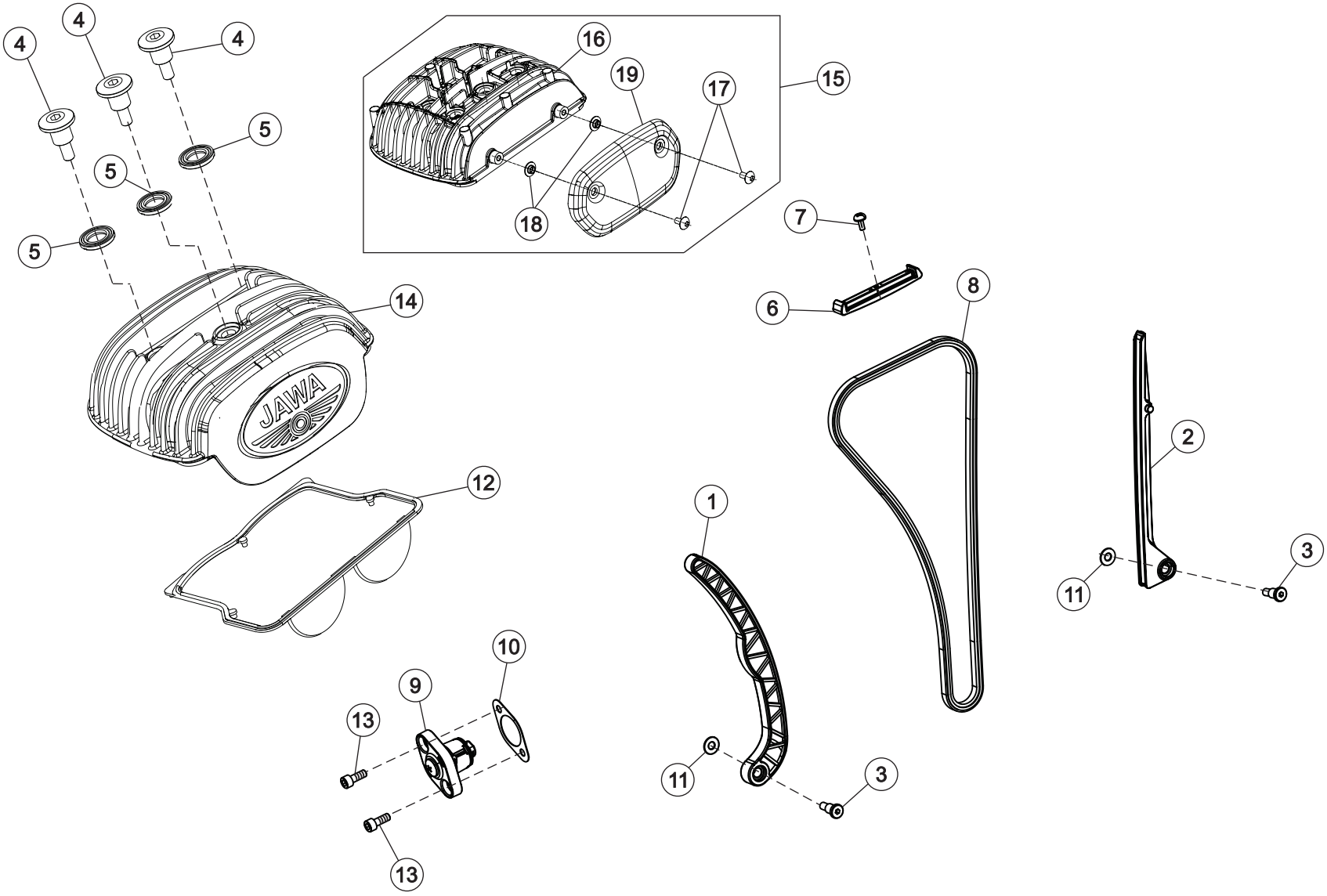

1 CAMCHAIN AND TENSIONER & CYLINDER HEAD COVER

SR. NO.	PART NUMBERS	PART DESCRIPTION	FRT	QTY	REMARKS
1	T0202CUF0340N	GUIDE CHAIN SLACK SIDE	5.4	1	
2	T0202AUF0450N	GUIDE CHAIN TIGHT SIDE	5.4	1	
3	T0202CUF0810N	GUIDE CHAIN PIVOT BOLT	0.9	2	
4	T02010VG0010N	CYLINDER HEAD COVER SPECIAL BOLT	0.5	5	
5	T18010UF0050N	RUBBER WASHER	0.6	5	
6	T0208AUF0640N	GUIDE CHAIN (TOP) WITH INSERT	1.6	1	
7	93500-04010-OH	PAN HEAD SCREW (M4*10)	1.6	1	
8	T0208BUF0390N	TIMING CHAIN	1.9	1	
9	T0208EVE0010N	ASSEMBLY, TENSIONER WITH O RING & SCREW	0.8	1	
10	T0208EUF0660N	GASKET, TENSIONER	0.8	1	
11	T18010UF0150N	WASHER, STAR DRUM BOLT (Ø6.4*Ø15*1)	1.6	2	
12	T0209AVG0010N	GASKET/SEAL, COVER CYLINDER HEAD_7 LUGS	0.6	1	
13	90001-M9Q-0000-IK	SHF FLANGE BOLT 6*22	0.1	2	
14	T0202DVG1030N	COVER CYLINDER HEAD_BLACK MAT RAVEN TEXTURE	0.5	1	
15	T0202DVG1080N	ASM COVER CYLINDER HEAD_BLACK MAT RAVEN TEXTURE	0.5	1	
16	T0202DVG0640N	COVER CYLINDER HEAD	0.5	1	
17	SF0212023	SCREW RDSKT M6X1X12XA2-70	0.2	2	
18	T18000KG0130N	COLLAR M6X3L	0.2	2	
19	T0202DVG0690N	COVER CYLINDER HEAD LOGO PLATE	0.3	1	

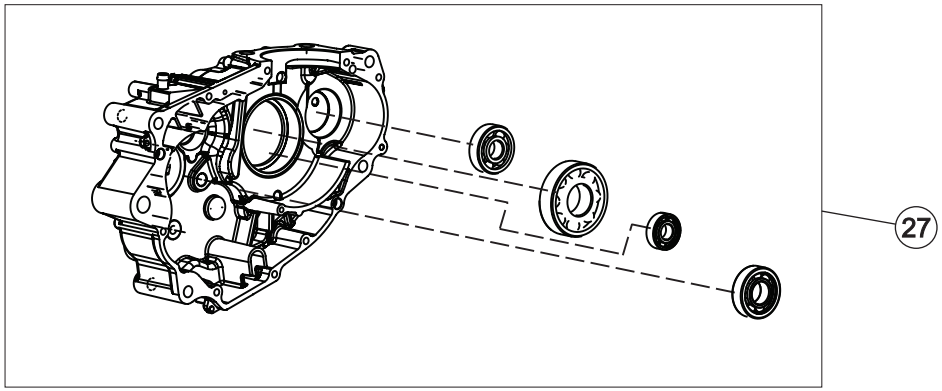
27

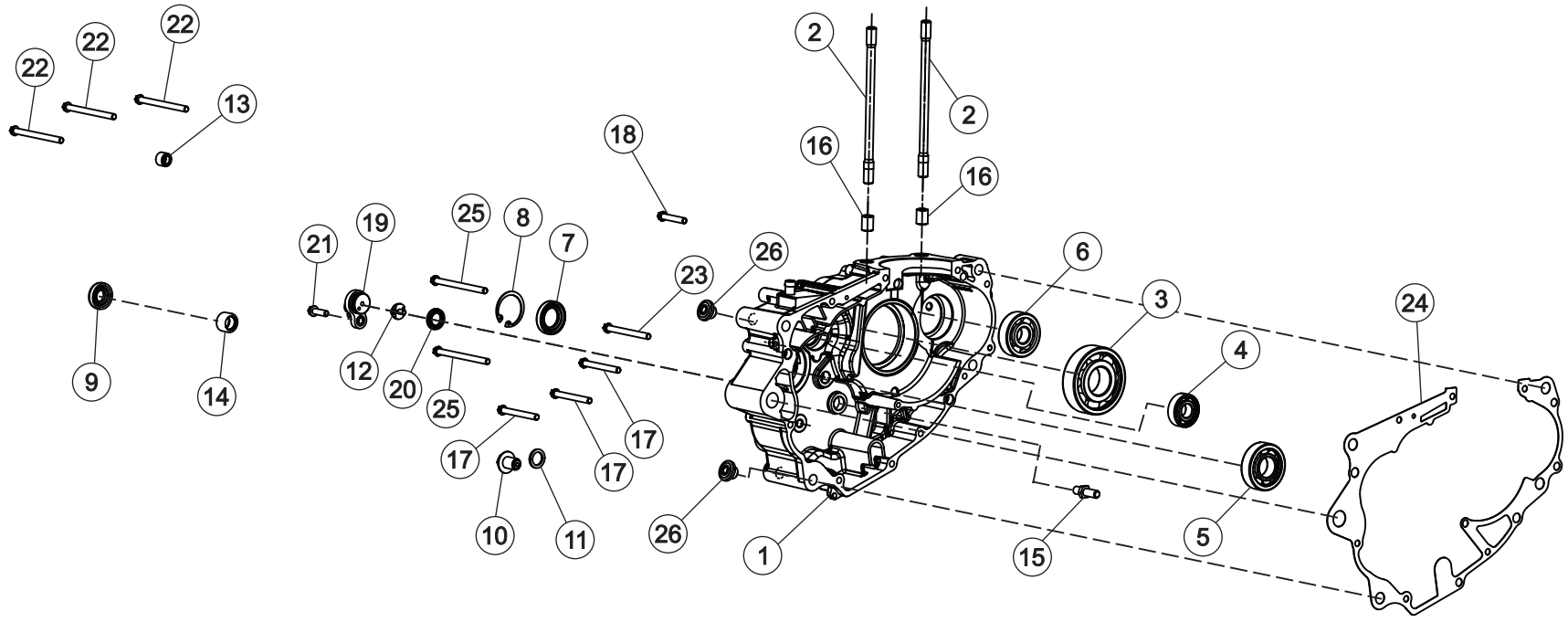
22
22
22
13
9
14
21
19
25
8
7
18
23
26
12
20
25
17
17
17
10
11
26
1
2
2
16
16
6
3
4
5
15
24

2 CRANKCASE LH

SR. NO.	PART NUMBERS	PART DESCRIPTION	FRT	QTY	REMARKS
1	T0202CVG0660E	CCLH WITH OIL PLUG & BREATHER PIPE_BLACK MAT RAVEN TEXTURE	8.2	1	
2	T0202CUF0760N	STUD - M10	3.3	2	
3	SP010103901	BEARING DG BALL SR 30X72X19 (NBC)	8.2	1	
4	T18050UF0130N	BEARING BALL INPUT (DIA15*DIA35*11)	8.2	1	
5	T18050UF0140N	BEARING BALL OUTPUT - ONE SIDE SEAL (DIA22*DIA50*14)	8.2	1	
6	T18050UF0320N	BEARING BALL BALANCER (6303.C3) (Ø17*Ø47*14)	8.2	1	
7	T18020UF0080N	OIL SEAL, OUTPUT SHAFT (DIA22*DIA34*7) FKM	0.6	1	
8	TSF0602039	INTERNAL CIRCLIP (Ø35*1.75)	0.6	1	
9	T18020UF0090N	OIL SEAL, LEVER SHIFT SHAFT (DIA14*DIA28*7) FKM	0.6	1	
10	T0202CUF2440N	BOLT, DRAIN MAGNETIC - M12X1.5	0.2	1	
11	MJ01700006100	WASHER -OIL DRAIN PLUG (DIA14.2*DIA20*2)	0.2	1	
12	T0217AUF0030N	SLIDING CONTACT NEUTRAL SWITCH	0.4	1	
13	T18050UF0160N	NEEDLE BRG STRATER INTERIM GEAR (DIA10*DIA14*10)	0.8	1	
14	T18050UF0310N	NEEDLE BRG (DIA14*DIA20*12) SHIFT SHAFT LH SIDE	8.2	1	
15	T0202CUF0780N	BOLT, SHIFTER STOPPER - M8X1.25	8.2	1	
16	T18070UF0030N	DOWEL PIN, HOLLOW DIA12*15	4.0	2	
17	SP0906043	BOLT, HEX FLANGE SH - M6X60	0.1	3	
18	TSF0102290	BOLT, HEX FLANGE SH - M6X35	0.1	1	
19	T0217AVG0010N	GEAR INDICATOR SWITCH WITH O RING	0.4	1	
20	T18020UF0100N	OIL SEAL, NEUTRAL SWITCH	0.6	1	
21	SP0906029	BPLT, HEX FLANGE SH-M6X20	0.2	1	
22	TSF0102291	BOLT, HEX FLANGE SH - M6X75	0.1	3	
23	SP0906033	BOLT, HEX FLANGE SH - M6X65	0.1	1	
24	T02090VG0030N	GASKET CRANKCASE C334	8.2	1	
25	SP0906034	BOLT, HEX FLANGE SH - M6X85	0.1	2	
26	T0202DVE0240N	GAUGE INSPECTION COVER	0.1	1	
27	T0202CVG0220E	CRANK CASE LH WITH BEARINGS_BLACK	8.2	1	

3 CRANKCASE RH

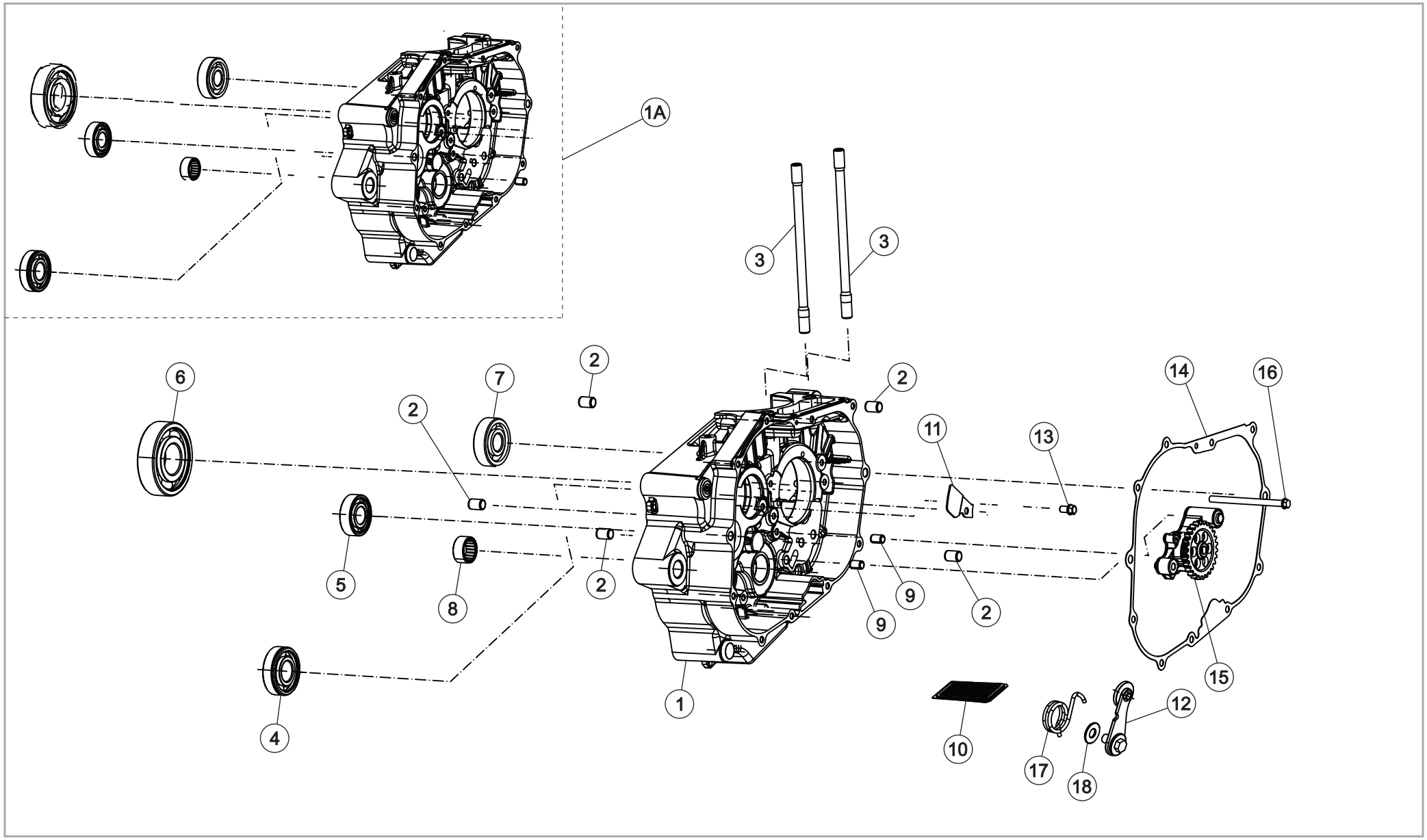

3 CRANKCASE RH

SR. NO.	PART NUMBERS	PART DESCRIPTION	FRT	QTY	REMARKS
1	T0202CVG0460N	CRANKCASE RH_BLACK MAT RAVEN TEXTURE	8.2	1	
2	MJ01760000600	DOWEL PIN, HOLLOW DIA10*14	8.2	5	
3	T0202CUF0760N	STUD - M10	3.3	2	
4	T18050UF0280N	BEARING INPUT SHAFT (DIA20*DIA47*14)	8.2	1	
5	T18050UF0170N	BEARING OUTPUT SHAFT (DIA17*DIA40*12)	8.2	1	
6	SP010103901	BEARING DG BALL SR 30X72X19 (NBC)	8.2	1	
7	T18050UF0320N	BEARING BALL BALANCER (6303.C3) (Ø17*Ø47*14)	8.2	1	
8	T18050UF0190N	BEARING NEEDLE SKF HK2012 (DIA20*DIA26*12)	8.2	1	
9	MJ01760000500	DOWEL PIN, HOLLOW (Ø8*12)	1.4	2	
10	T0203BUF0150N	OIL STRAINER	0.6	1	
11	T0202CUF2430N	BREATHER HOLE COVER PLATE	1.4	1	
12	T0215CUF0650N	ASM STOPPER GEAR SHIFT MECH	0.7	1	
13	TSF0102281	FLANGE BOLT M6*10	1.4	2	
14	T0209DUF0210N	GASKET, COVER RH	0.7	1	
15	T0203AUF0160N	OIL PUMP COMPLETE - ADVIK	0.7	1	
16	SP0906034	BOLT, HEX FLANGE SH - M6X85	0.7	1	
17	T0202CUF0480N	DRUM LOCK SPRING	0.8	1	
18	T18010UF0150N	WASHER, STAR DRUM BOLT(Ø6.4*Ø15*1)	0.7	1	

4 CYLINDER HEAD EXPLOSION

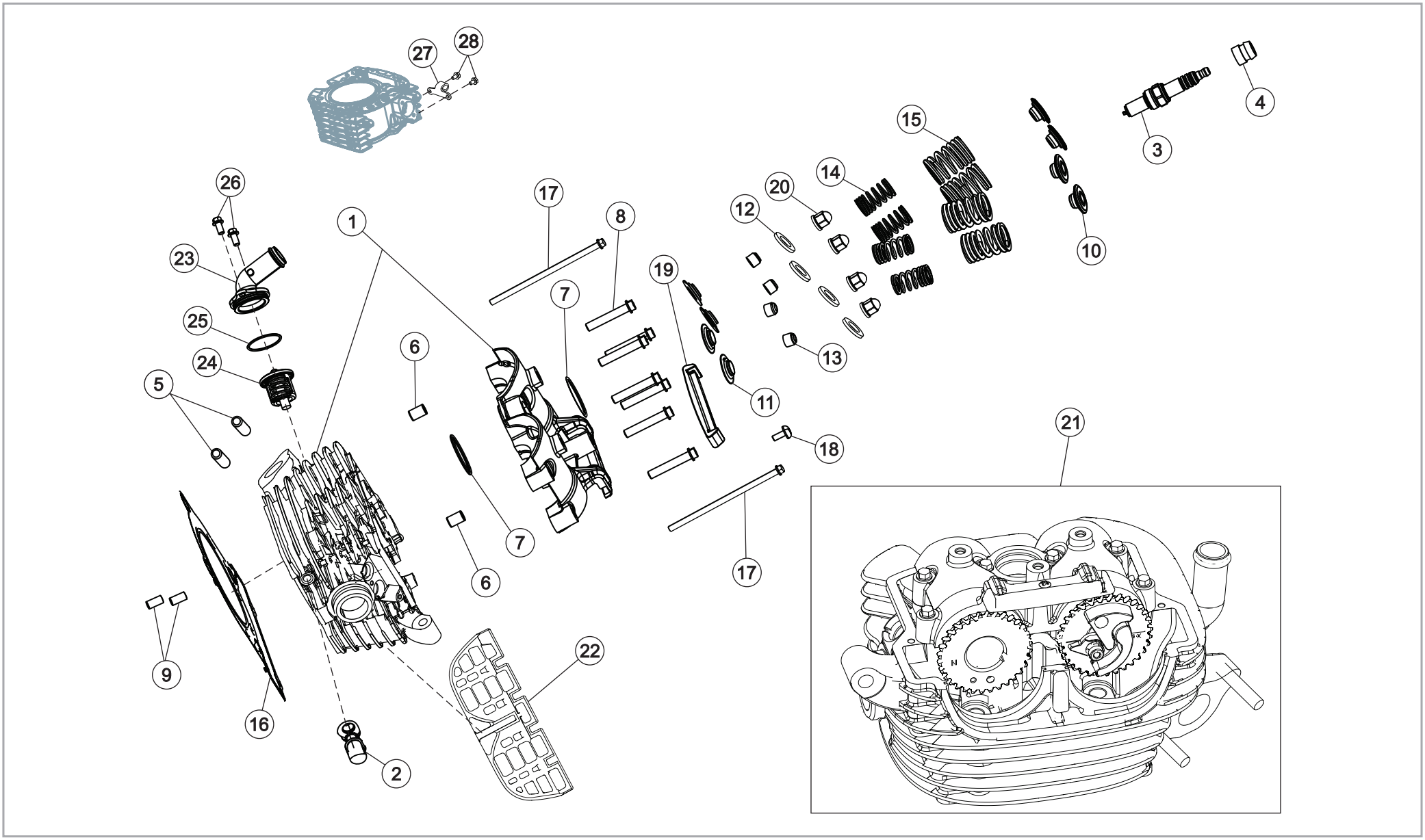

4 CYLINDER HEAD EXPLOSION

SR. NO.	PART NUMBERS	PART DESCRIPTION	FRT	QTY	REMARKS
1	T0202BVG0390N	SUB ASM CYLINDER HEAD & CAM SHAFT HOLDER_BLACK MAT RAVEN TEXTURE	5.2	1	
2	T1502HUF0060N	WATER SENSOR	0.3	1	
3	T1502DUF0070N	SPARK PLUG	0.5	1	
4	T02010UF0020N	GROMMET, SPARK PLUG	0.5	1	
5	T0202BVG0040N	STUD MUFFLER (M8X48)	2.4	4	
6	MJ01760000500	DOWEL PIN, HOLLOW (Ø8*12)	0.6	2	
7	T18040UF0090N	O-RING, CAMSHAFT HOLDER	0.5	2	
8	TSF0102290	BOLT, HEX FLANGE SH - M6X35	0.6	7	
9	T0202AUF0820N	DOWEL PIN, SOLID (Ø6X14)	4.2	2	
10	T0202BUF0420N	UPPER VALVE SPRING RETAINER	4.6	4	
11	T0202BUF0410N	LOWER VALVE SPRING RETAINER	4.6	4	
12	T0202BUF1660N	HEAD NUT WASHER CYLINDER HEAD (Ø10.2*Ø18*2)	1.1	4	
13	T0208BUF0510N	VALVE STEM SEAL	4.6	4	
14	T0202BVG0240N	INNER VALVE SPRING	4.6	4	
15	T0202BVG0250N	OUTER VALVE SPRING	4.6	4	
16	T02090VG0020N	GASKET CYLINDER HEAD	4.2	1	
17	TSF0102293	BOLT, HEX FLANGE SH - M6X130 (HEAD MOUNT)	3.2	2	
18	93500-04010-OH	PAN HEAD SCREW (M4*10)	0.5	1	
19	T0208AUF0640N	GUIDE CHAIN (TOP) WITH INSERT	0.5	1	
20	T0202BUF2140N	HEAD NUT CAP TYPE	1.1	4	
21	T0202BVG0360N	ASM CYLINDER HEAD_BLACK MAT RAVEN TEXTURE	1.0	1	
22	T0209AVE0020N	RUBBER GROMMET CYLINDER HEAD	0.6	1	
23	T04000VE0010N	COVER THERMOSTAT	0.4	1	
24	T0401EVE0030N	THERMOSTAT VALVE TWO WAY	0.4	1	
25	T0209BVE0020N	O RING THEMOSTAT 1.78X33.05	0.4	1	
26	SP0906041	BOLT, HEX FLANGE SH-M6X12	0.2	2	
27	T0219BVE0010E	CLUTCH CABLE BRACKET	0.3	1	
28	TSF0102281	FLANGE BOLT M6*10	0.1	2	

5 DRUM ASM & SHIFT SHAFT MECH CAMBINE

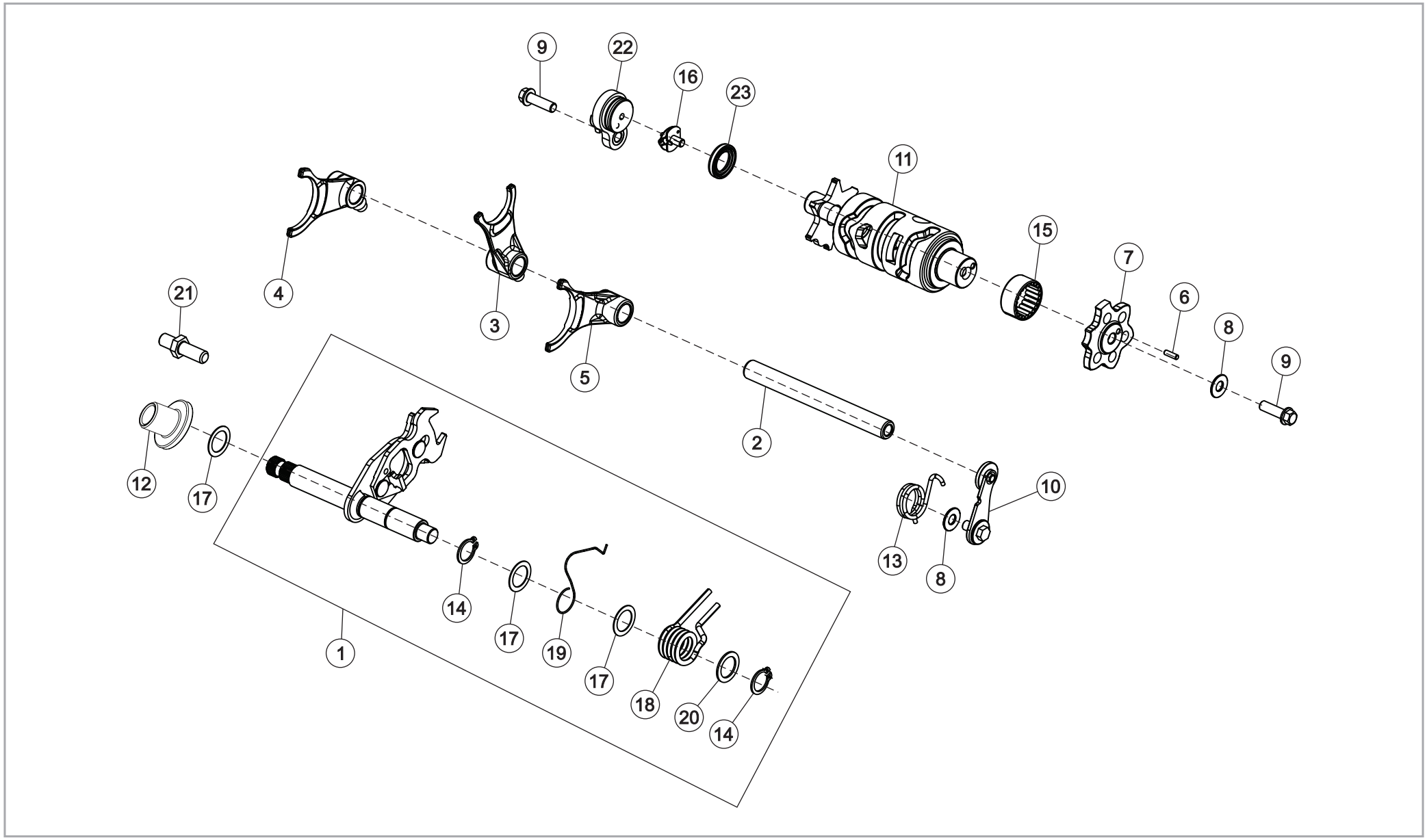

5 DRUM ASM & SHIFT SHAFT MECH CAMBINE

SR. NO.	PART NUMBERS	PART DESCRIPTION	FRT	QTY	REMARKS
1	T0215CUF0580N	LEVER COMPLETE GEAR SHIFT WITH TORSION SPRING	8.2	1	
2	T0215CUF0430N	SHAFT, FORK GEAR SHIFT	8.2	1	
3	T0215CVG0020N	FORK, GEAR SHIFT INPUT	8.2	1	
4	T0215CVG0040N	FORK GEAR SHIFT OUTPUT RIGHT	8.2	1	
5	T0215CVG0030N	FORK GEAR SHIFT OUTPUT LEFT	8.2	1	
6	T0215CUF0400N	PIN STAR DRUM	0.7	1	
7	T0215CVG0080N	STAR DRUM	0.8	1	
8	T18010UF0150N	WASHER, STAR DRUM BOLT(Ø6.4*Ø15*1)	0.7	1	
9	SP0906029	BOLT,HEX FLANGE SH - M6X20	0.7	2	
10	T0215CUF0650N	ASSEMBLY STOPPER COMP GEAR SHIFT DRUM	0.7	1	
11	T0215CVG0050N	ASSEMBLY, SHIFT DRUM	8.2	1	
12	T02200KE0010N	CHAIN SLIDER BUSH	0.3	1	
13	T0202CUF0480N	DRUMLOCK SPRING	0.7	1	
14	T0215CUF0350N	CIRCLIP, Ø12*Ø20*0.5	8.2	2	
15	T18050UF0190N	BEARING NEEDLE SKF	8.2	1	
16	T0217AUF0030N	SLIDING CONTACT NEUTRAL SWITCH	8.2	1	
17	T18010UF0120N	WASHER, SHIFT SHAFT (Ø14*Ø20*0.5)	8.2	3	
18	T0215CUF0340N	SLECTOR TORSION SPRING	8.2	1	
19	T0215CUF0570N	TORSION SPRING	8.2	1	
20	T18010UF1000N	WASHER, SHIFT SHAFT (Ø14*Ø20*1)	8.2	1	
21	T0202CUF0780N	BOLT, SHIFTER STOPPER - M8X1.25	4.0	1	
22	T0217AUF0010N	NEUTRAL SWITCH WITH O RING	0.2	1	
23	T18020UF0100N	OIL SEAL, NEUTRAL SWITCH	8.2	1	

6 MAGNETO ASSEMBLY

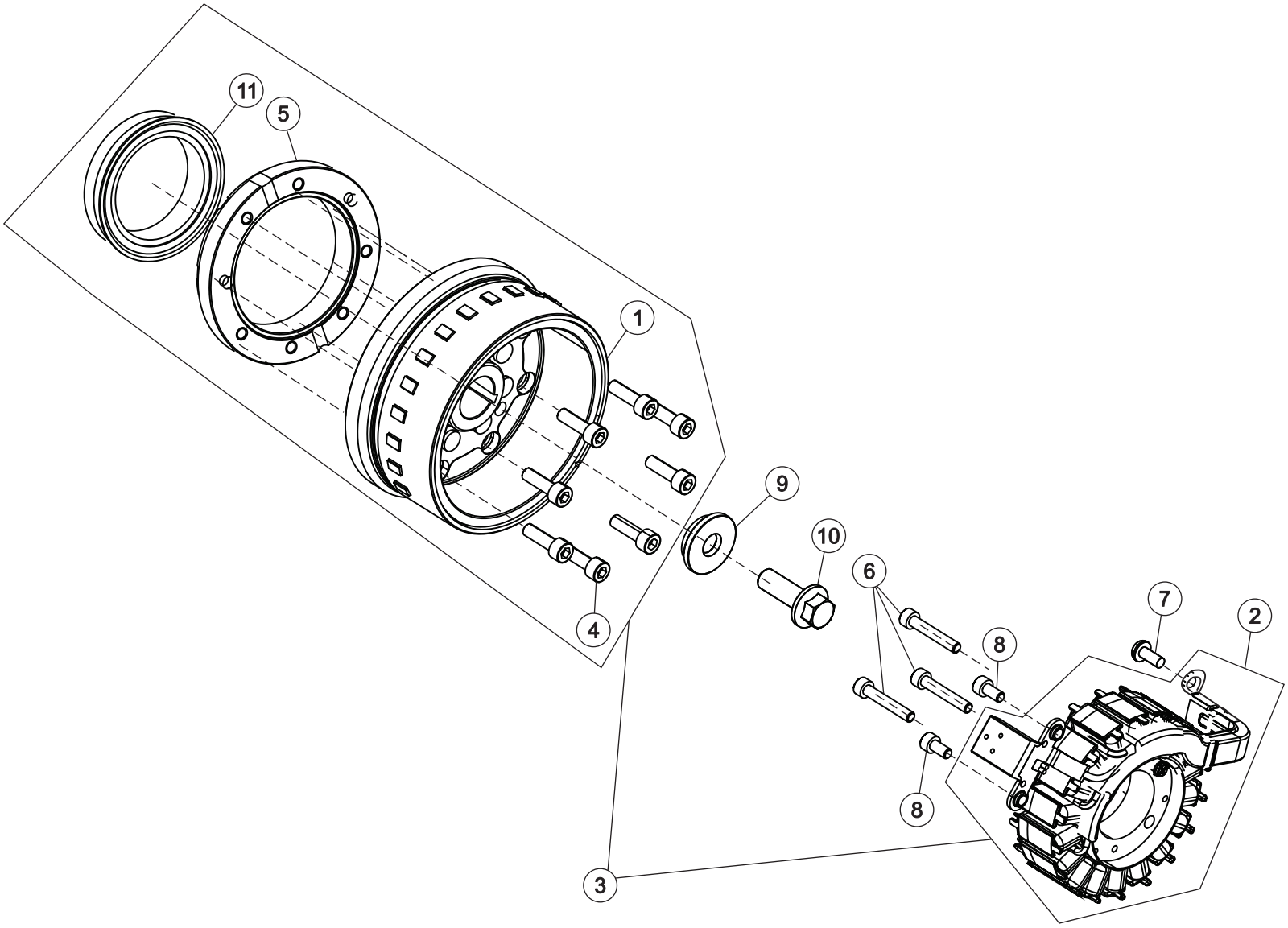

6 MAGNETO ASSEMBLY

SR. NO.	PART NUMBERS	PART DESCRIPTION	FRT	QTY	REMARKS
1	T1502AVG0040N	ROTOR ASSEMBLY (HIGHER INERTIA) (WITH GI)	0.5	1	
2	T1502AVG0060N	STATOR ASSEMBLY (HIGHER INERTIA) (WITH GI)	0.7	1	
3	T1502AVG0070N	MAGNETO ASSEMBLY (HIGHER INERTIA) (WITH GI)	0.6	1	
4	TSF0224076	BOLT, SOCKET HEAD_M6X1X20	0.6	8	
5	T1502AUF0190N	FLANGE ONE WAY CLUTCH	0.6	1	
6	TSF0224075	BOLT, HEX SOCKET HEAD - M5X30 (STATOR MOUNT)	0.5	3	
7	SP0805020	PAN HEAD SCREW - M5X12	0.5	1	
8	TSF0224077	BOLT, HEX SOCKET HEAD - M5*10	0.7	2	
9	T0202DVG0810N	STEP BUSH (H I MAGNETO)	0.5	1	
10	T1502AVG0050N	BOLT SPECIAL, MAGNETO (M10X1.25) (WITH INTEGRAL WASHER)	0.5	1	
11	T1502AUF0120N	ONE WAY CLUTCH COMPONENT	0.6	1	

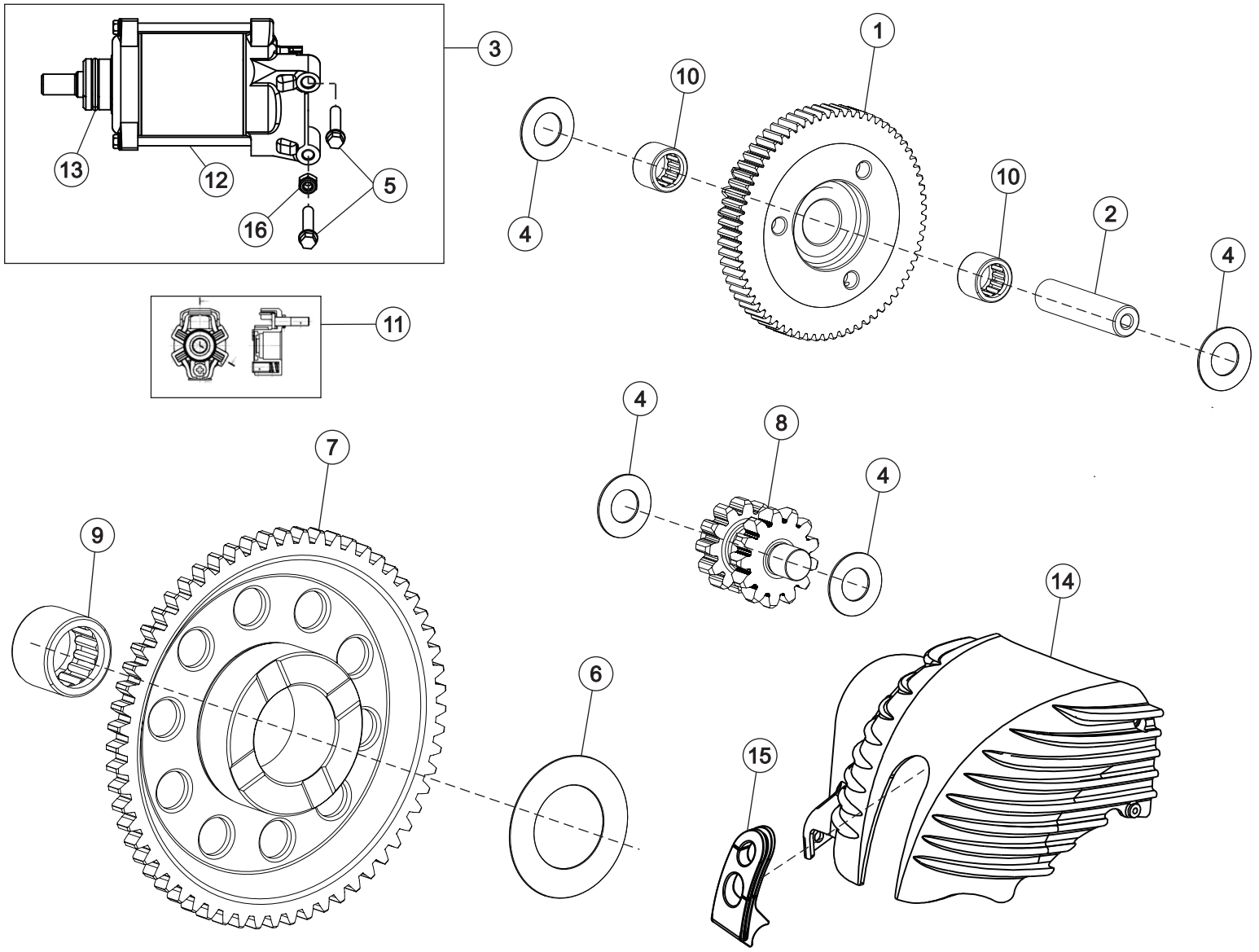
3
13
12
5
16
11
1
10
4
10
2
4
4
8
4
7
9
6
14
15

7 STARTING SYSTEM & STARTER MOTOR

SR. NO.	PART NUMBERS	PART DESCRIPTION	FRT	QTY	REMARKS
1	T0205BVG0050N	ASSEMBLY, SLIPPER CLUTCH	0.1	1	
2	T0205BUF0350N	SHAFT, STARTER COUNTER	0.1	1	
3	T1503BUF0060N	ASSEMBLY, STARTER MOTOR	0.2	1	
4	T18010UF0920N	WASHER_10.3*20*0.8 (STRATER INTRM GEAR)	0.1	4	
5	TSF0102296	BOLT, HEX FLANGE SH - M6X30 (STARTER MOTOR COUNT)	0.1	2	
6	T18010UF0940N	WASHER ONE WAY CLUTCH	0.3	1	
7	T0205BUF0310N	GEAR, STARTER OWC	0.3	1	
8	T0205BUF0320N	GEAR, INTERIM STARTER COUNTER	0.2	1	
9	T18050UF0260N	NEEDLE ROLLER BEARING (Ø26XØ31X24) - SINGLE ROW	0.5	1	
10	T18050UF0160N	NEEDLE BRG STARTER INTERIM GEAR (DIA10*DIA14*10)	0.6	2	
11	T1501BKE0010E	BRUSH HOLDER SET	0.5	1	
12	T1501BKE0020E	SQUARE RING	0.4	2	
13	T1503BKE0030E	O RING	0.4	1	
14	T0202DVG1020N	COVER STARTER MOTOR_BLACK MAT RAVEN TEXTURE)	0.4	1	
15	T0209CVE0010N	RUBBER GROMMET STARTER MOTOR COVER	0.4	1	
16	TSF0318007	M6 NYLOC NUT (BLACK)	0.1	1	

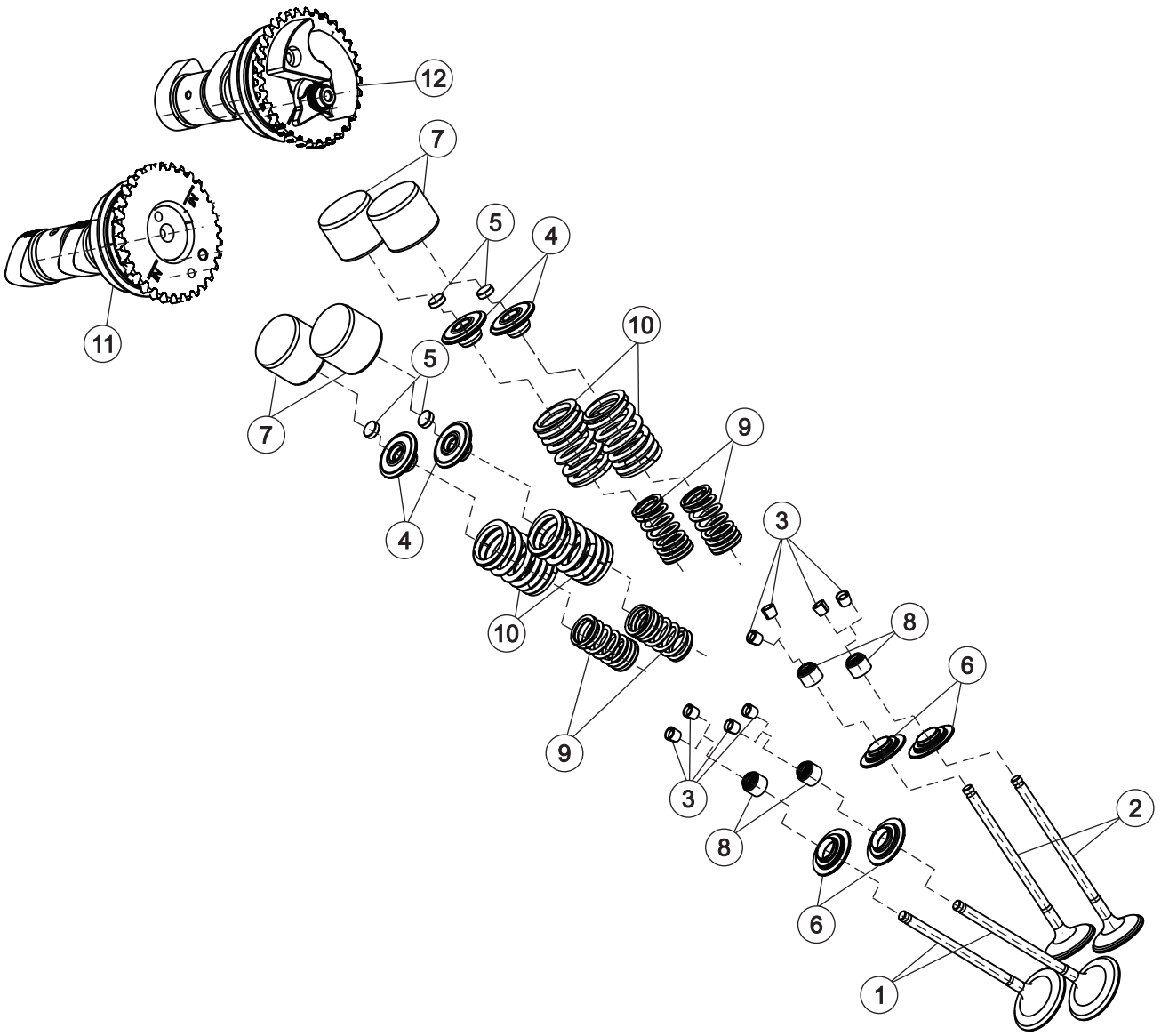
12
7
5
4
11
10
5
7
9
4
3
10
8
6
9
3
2
8
6
1

8 VALVE TRAIN AND CAM SHAFT

SR. NO.	PART NUMBERS	PART DESCRIPTION	FRT	QTY	REMARKS
1	T0208DUF0430N	VALVE, INTAKE	4.6	2	
2	T0208DVG0010N	VALVE, EXHAUST	4.6	2	
3	T0208BUF0490N	COTTER	4.6	8	
4	T0202BUF0420N	UPPER VALVE SPRING RETAINER	4.6	4	
5	T0208BUF0480N	SHIM KIT	1.5	1	
5	T0208EUF0670N	SHIM 2.000-2.020	1.5	4	
5	T0201AUF0340N	SHIM 2.021-2.040	1.5	4	
5	T0208EUF0680N	SHIM 2.041-2.060	1.5	4	
5	T0201AUF0350N	SHIM 2.061-2.080	1.5	4	
5	T0208EUF0690N	SHIM 2.081-2.100	1.5	4	
5	T0201AUF0360N	SHIM 2.101-2.120	1.5	4	
5	T0208EUF0700N	SHIM 2.121-2.140	1.5	4	
5	T0201AUF0370N	SHIM 2.141-2.160	1.5	4	
5	T0208EUF0710N	SHIM 2.161-2.180	1.5	4	
5	T0201AUF0380N	SHIM 2.181-2.200	1.5	4	
5	T0208EUF0720N	SHIM 2.201-2.220	1.5	4	
5	T0201AUF0390N	SHIM 2.221-2.240	1.5	4	
5	T0208EUF0730N	SHIM 2.241-2.260	1.5	4	
5	T0201AUF0400N	SHIM 2.261-2.280	1.5	4	
5	T0208EUF0740N	SHIM 2.281-2.300	1.5	4	
5	T0201AUF0410N	SHIM 2.301-2.320	1.5	4	
5	T0208EUF0750N	SHIM 2.321-2.340	1.5	4	
5	T0201AUF0420N	SHIM 2.341-2.360	1.5	4	
5	T0208EUF0760N	SHIM 2.361-2.380	1.5	4	
5	T0201AUF0430N	SHIM 2.381-2.400	1.5	4	
5	T0208EUF0770N	SHIM 2.401-2.420	1.5	4	
5	T0201AUF0440N	SHIM 2.421-2.440	1.5	4	
5	T0208EUF0780N	SHIM 2.441-2.460	1.5	4	
5	T0201AUF0450N	SHIM 2.461-2.480	1.5	4	
5	T0208EUF0790N	SHIM 2.481-2.500	1.5	4	

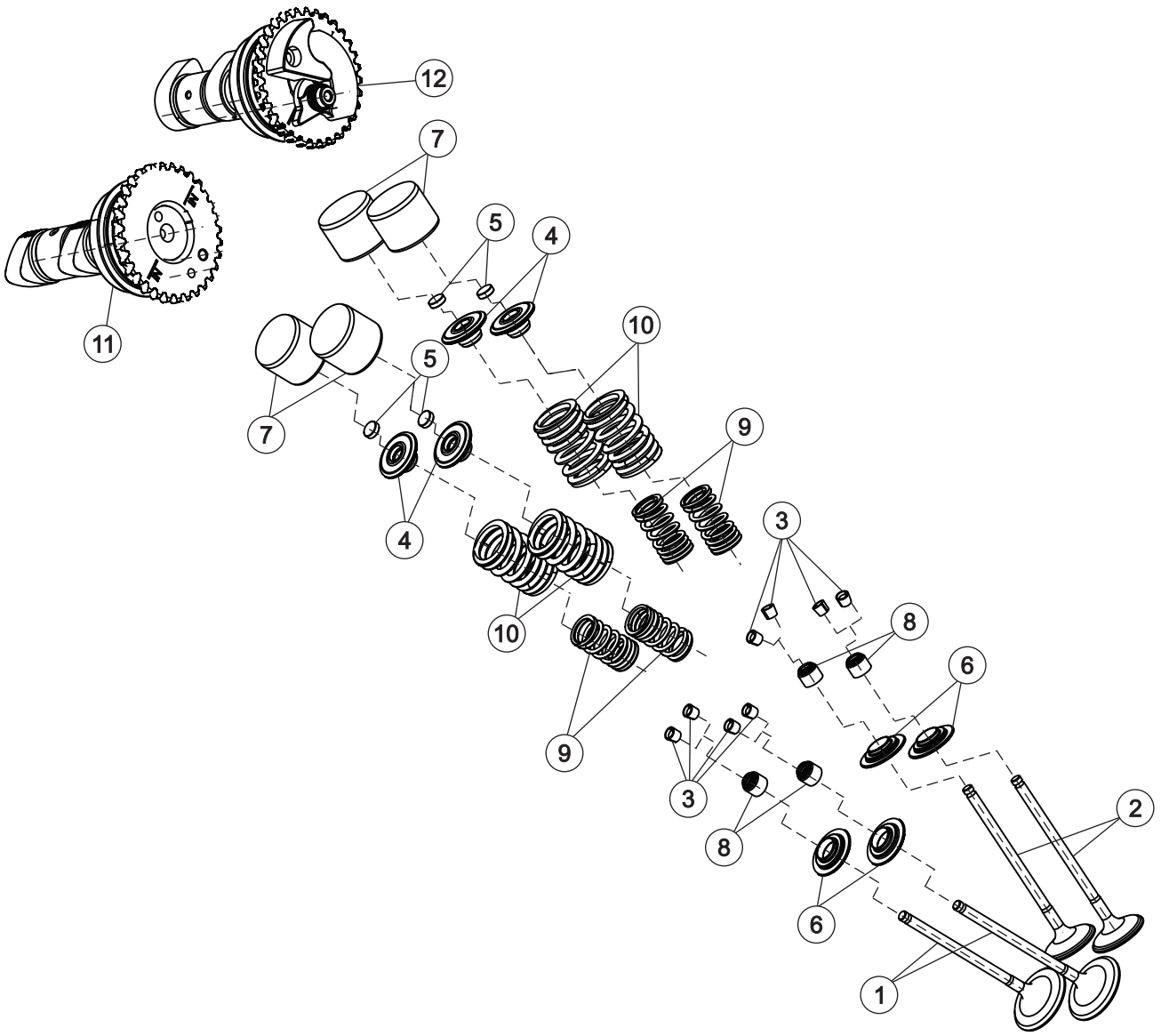
12
7
5
4
11
10
5
7
9
4
3
10
8
6
9
3
2
8
6
1

SR. NO.	PART NUMBERS	PART DESCRIPTION	FRT	QTY	REMARKS
5	T0201AUF0460N	SHIM 2.501-2.520	1.5	4	
5	T0208EUF0800N	SHIM 2.521-2.540	1.5	4	
5	T0201AUF0470N	SHIM 2.541-2.560	1.5	4	
5	T0208EUF0810N	SHIM 2.561-2.580	1.5	4	
5	T0201AUF0480N	SHIM 2.581-2.600	1.5	4	
5	T0208EUF0820N	SHIM 2.601-2.620	1.5	4	
5	T0201AUF0490N	SHIM 2.621-2.640	1.5	4	
5	T0208EUF0830N	SHIM 2.641-2.660	1.5	4	
5	T0201AUF0500N	SHIM 2.661-2.680	1.5	4	
5	T0208EUF0840N	SHIM 2.681-2.700	1.5	4	
5	T0201AUF0510N	SHIM 2.701-2.720	1.5	4	
5	T0201AUF0520N	SHIM 2.721-2.740	1.5	4	
5	T0201AUF0530N	SHIM 2.741-2.760	1.5	4	
5	T0201AUF0640N	SHIM 2.761-2.780	1.5	4	
5	T0201AUF0540N	SHIM 2.781-2.800	1.5	4	
5	T0201AUF0550N	SHIM 2.801-2.820	1.5	4	
5	T0201AUF0560N	SHIM 2.821-2.840	1.5	4	
5	T0201AUF0570N	SHIM 2.841-2.860	1.5	4	
5	T0201AUF0580N	SHIM 2.861-2.880	1.5	4	
5	T0201AUF0590N	SHIM 2.881-2.900	1.5	4	
5	T0201AUF0600N	SHIM 2.901-2.920	1.5	4	
5	T0202AUF2110N	SHIM 2.921-2.940	1.5	4	
5	T0201AUF0610N	SHIM 2.941-2.960	1.5	4	
5	T0201AUF0620N	SHIM 2.961-2.980	1.5	4	
5	T0201AUF0630N	SHIM 2.981-3.000	1.5	4	
6	T0202BUF0410N	LOWER VALVE SPRING RETAINER	4.6	4	
7	T0208BUF0500N	TAPPET	1.2	4	
8	T0208BUF0510N	VALVE STEM SEAL	4.6	4	
9	T0202BUF0580N	VALVE SPRING INNER	4.6	4	
10	T0202BUF0430N	VALVE SPRING OUTER	4.6	4	

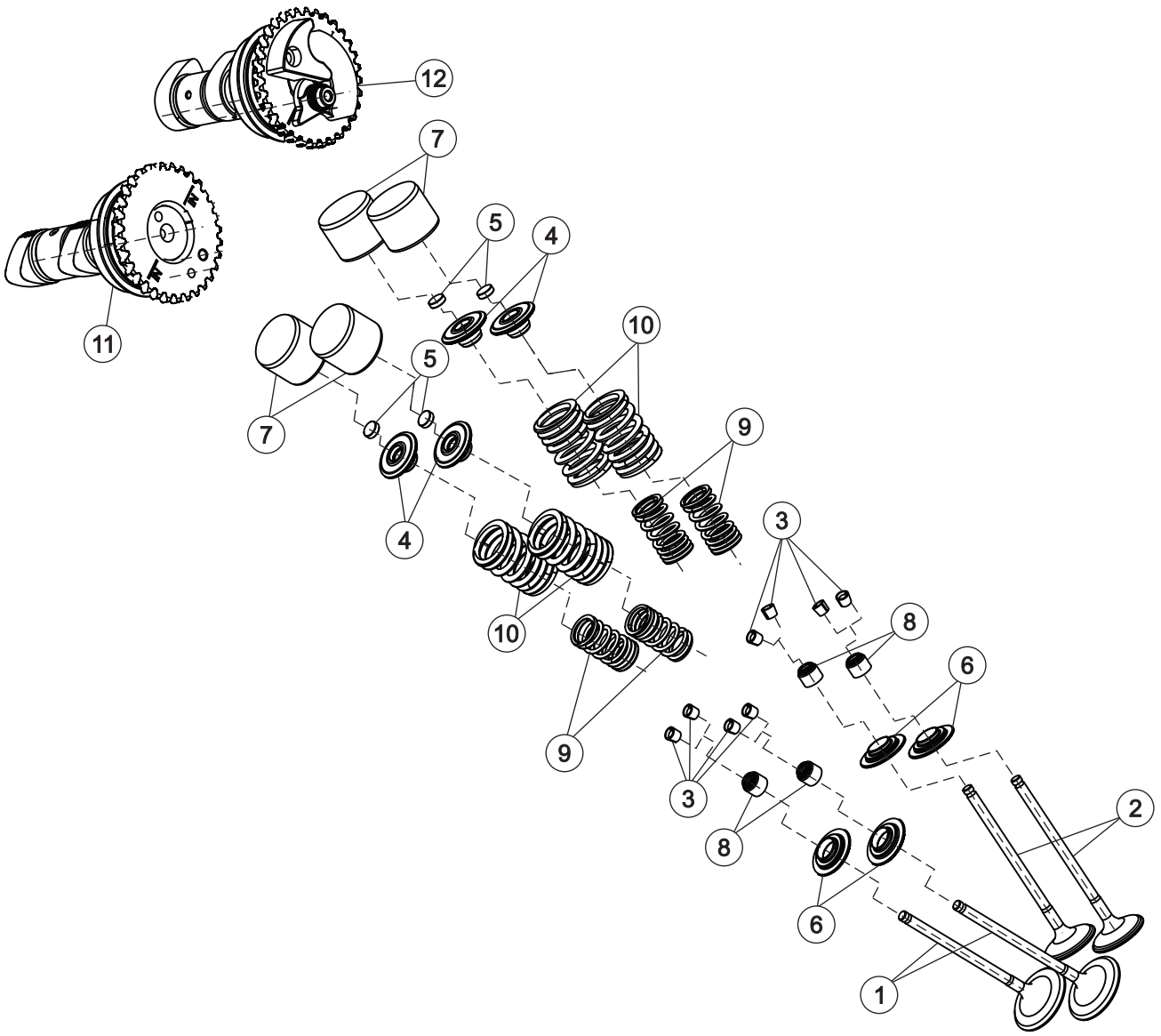
12
7
5
4
11
10
5
7
9
4
3
10
8
6
9
3
2
8
6
1

SR. NO.	PART NUMBERS	PART DESCRIPTION	FRT	QTY	REMARKS
11	T0208AVG0290N	ASSEMBLY, CAMSHAFT INTAKE	1.1	1	
12	T0208AVG0080N	ASSEMBLY, CAMSHAFT EXHAUST	1.1	1	

9 BALANCER SHAFT ASSEMBLY

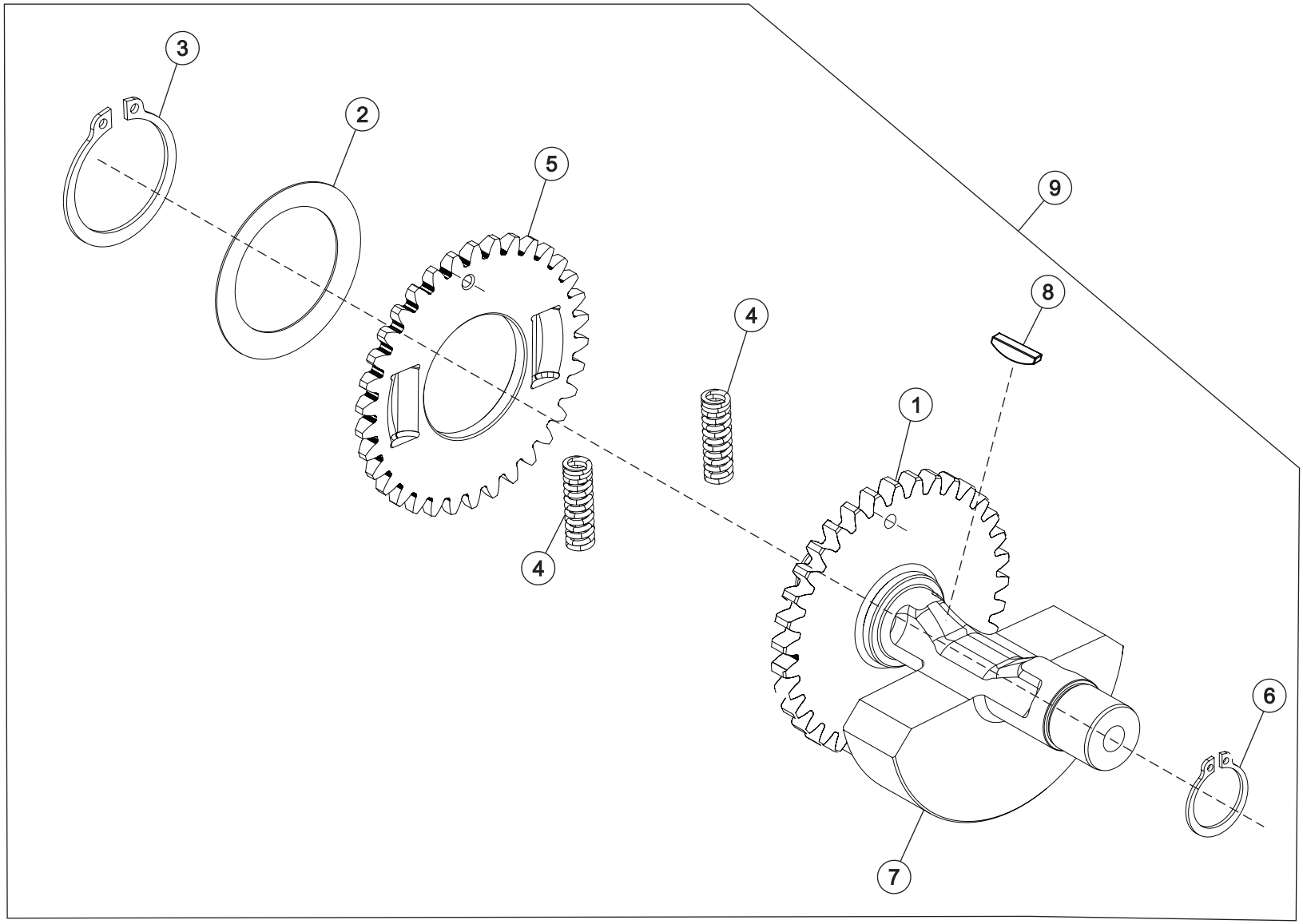

9 BALANCER SHAFT ASSEMBLY

SR. NO.	PART NUMBERS	PART DESCRIPTION	FRT	QTY	REMARKS
1	T0204EUF0070N	BALANCER SHAFT FIXED GEAR	8.2	1	
2	T0204EUF0100N	PLATE SPRING	8.2	1	
3	T0204EUF0110N	CIRCLIP (F30)	8.2	1	
4	T0204EUF0090N	CYLINDER SPRING	8.2	2	
5	T0204EUF0080N	BALANCER GEAR, DAMPING	8.2	1	
6	T0204EUF0120N	CIRCLIP A17X1	8.2	1	
7	T0204EVG0020N	BALANCER SHAFT	8.2	1	
8	T18080UF0030N	KEY LOCK	8.2	1	
9	T0204EVG0010N	ASSEMBLY, BALANCER SHAFT	8.2	1	

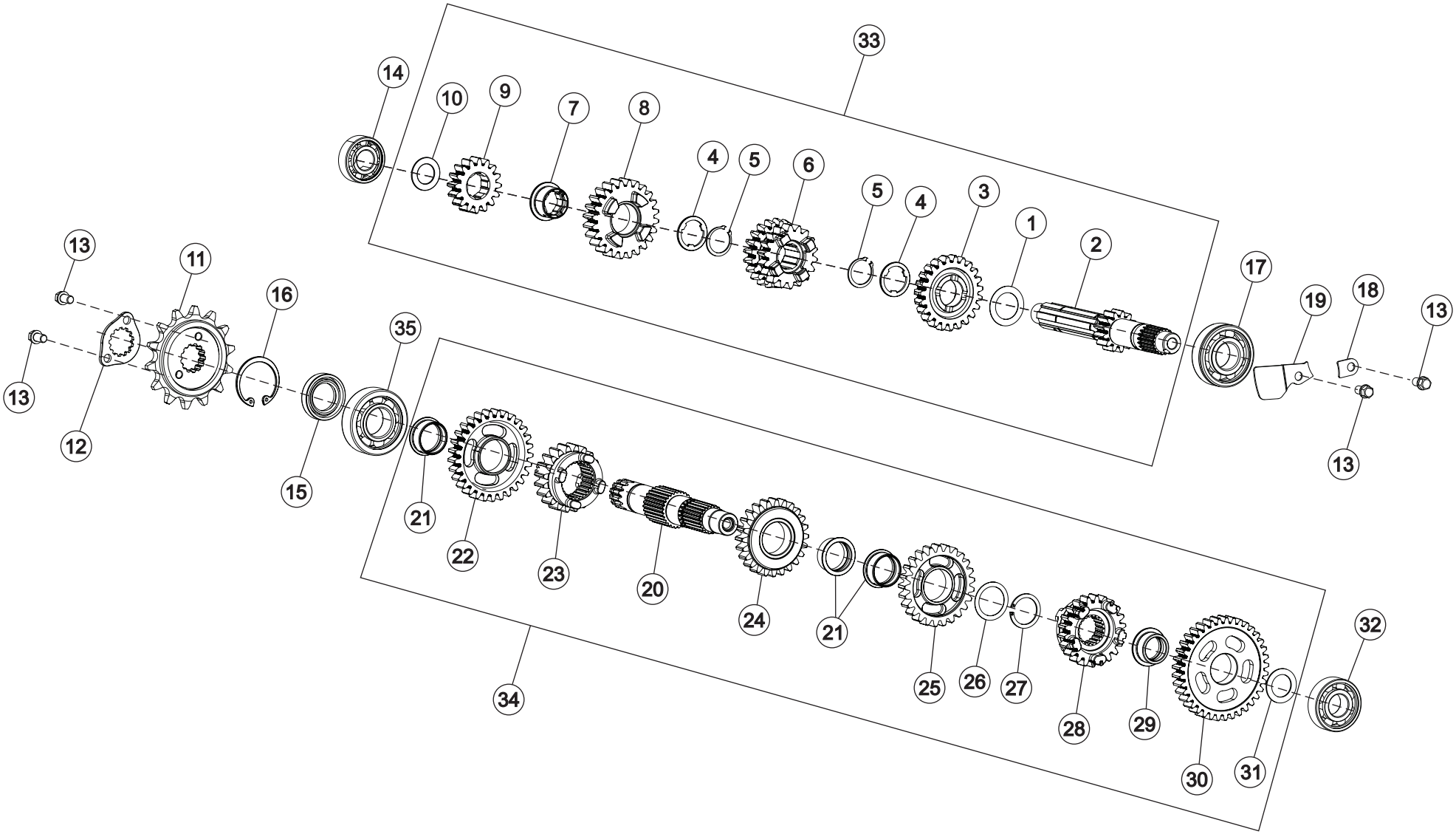
33
14
10
9
7
8
4
5
6
5
4
3
1
2
17
19
18
13
13
13
11
16
35
13
12
15
21
22
23
20
24
21
25
26
27
28
29
30
31
32
34

10 TRANSMISSION SYSTEM

SR. NO.	PART NUMBERS	PART DESCRIPTION	FRT	QTY	REMARKS
1	T0215DVG0470N	WASHER_Ø20.2*Ø30*0.5	8.2	1	
2	T0215DVG0210N	SHAFT, INPUT T/M	8.2	1	
3	T0215DVG0240N	GEAR, 5TH DRIVE	8.2	1	
4	T0215DVG0280N	SPLINE WASHER_Ø20.3XØ26X1.6	8.2	2	
5	T0215AUF0130N	CIRCLIP	8.2	2	
6	T0215DVG0230N	GEAR, 3RD & 4TH DRIVE (INTEGRAL) (INTERMEDIATE)	8.2	1	
7	T0215DVG0270N	SPLINE BUSH - 6TH DRIVE	8.2	1	
8	T0215DVG0250N	GEAR, 6TH DRIVE	8.2	1	
9	T0215DVG0220N	GEAR, 2ND DRIVE	8.2	1	
10	T18010UF0070N	WASHER_15.2X25X1	8.2	1	
11	T0215DUF0080N	SPROCKET, DRIVE	0.3	1	
12	T0215DUF0090N	LOCK PLATE DRIVE SPROCKET	0.3	1	
13	TSF0102281	FLANGE BOLT M6*10	0.3	3	
14	T18050UF0130N	BEARING BALL INPUT	8.2	1	
15	T18020UF0080N	OIL SEAL, OUTPUT SHAFT	8.2	1	
16	TSF0602039	INTERNAL CIRCLIP (Ø35*1.75)	0.2	1	
17	T18050UF0280N	BEARING INPUT SHAFT	8.2	1	
18	T18010UF0100N	*WASHER_Ø17.2*Ø26*1	8.2	1	
18.1	T0215AUF0990N	WASHER 17.2 X 26 X THK. (1.000 TO 1.050)	8.2	1	
18.2	T0215AUF1000N	WASHER 17.2 X 26 X THK. (1.051 TO 1.100)	8.2	1	
18.3	T0215AUF1010N	WASHER 17.2 X 26 X THK. (1.101 TO 1.150)	8.2	1	
19	T0202CUF2430N	BREATHER HOLE COVER PLATE	0.8	1	
20	T0215DUF0190N	SHAFT, OUTPUT T/M	8.2	1	
21	T0215AUF0200N	BUSH, 2ND GEAR	8.2	3	
22	T0215DVG0160N	GEAR 2ND DRIVEN	8.2	1	
23	T0215DVG0200N	GEAR 6TH DRIVEN	8.2	1	
24	T0215DVG0180N	GEAR, 4TH DRIVEN	8.2	1	
25	T0215DVG0170N	GEAR 3RD, DRIVEN	8.2	1	
26	T18010UF0090N	WASHER_22.2*28*0.5	8.2	1	
27	T18050UF0140N	BEARING OUTPUT SHAFT	8.2	1	

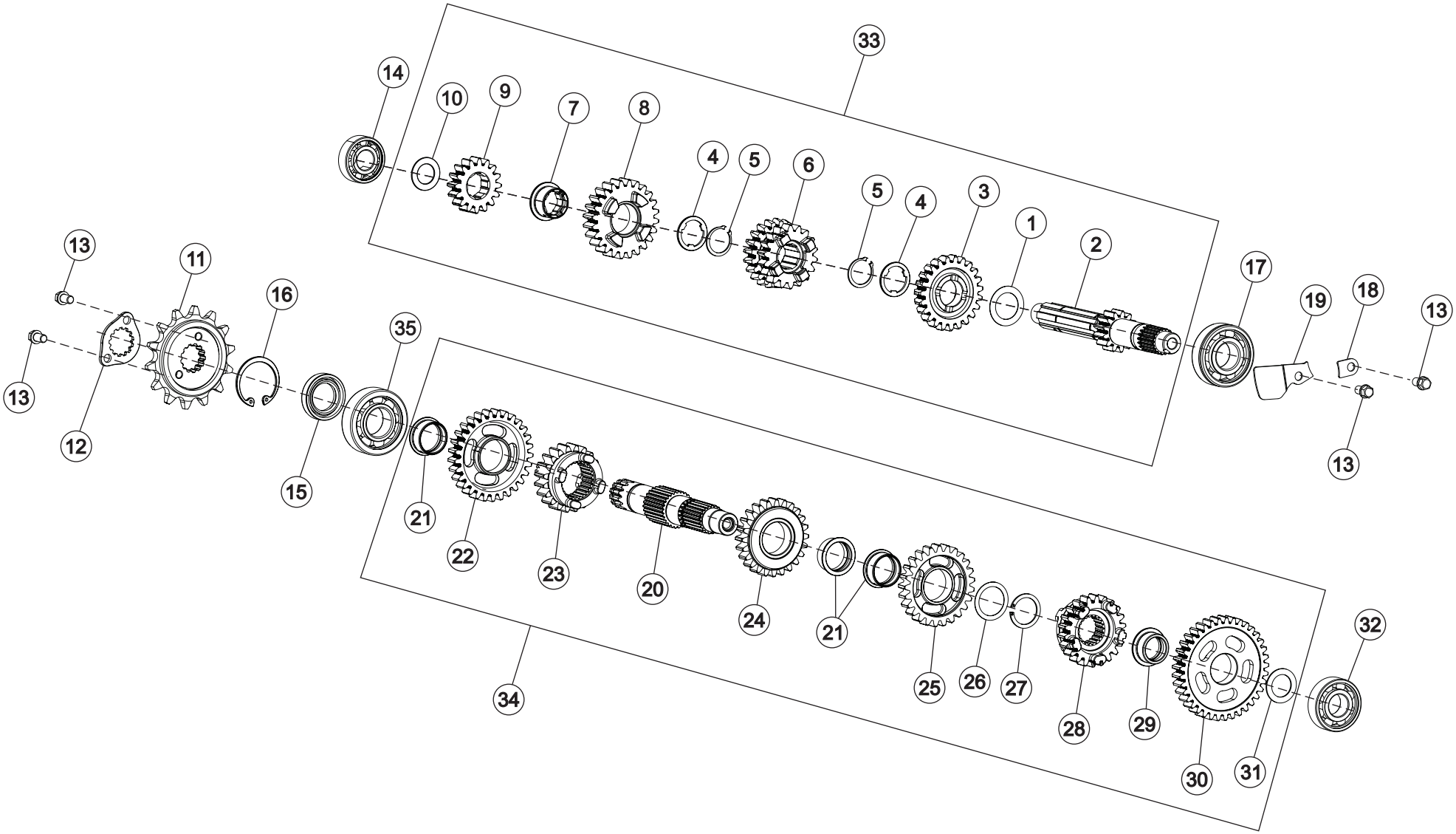
33
14
10
9
7
8
4
5
6
5
4
3
1
2
17
19
18
13
13
13
11
16
35
13
12
15
21
22
23
20
24
21
25
26
27
28
29
30
31
32
34

SR. NO.	PART NUMBERS	PART DESCRIPTION	FRT	QTY	REMARKS
28	T0215DVG0190N	GEAR, 5TH DRIVEN	8.2	1	
29	T0215AUF0260N	BUSH, 1ST GEAR	8.2	1	
30	T0215DVG0150N	GEAR, 1ST DRIVEN	8.2	1	
31	T0215AUF1020N	WASHER 17.2 X 26 X THK. (1.151 TO 1.200)	8.2	1	
31	T0215AUF1030N	WASHER 17.2 X 26 X THK. (1.201 TO 1.250)	8.2	1	
31	T0215AUF1040N	WASHER 17.2 X 26 X THK. (1.251 TO 1.300)	8.2	1	
32	T18050UF0170N	BEARING OUTPUT SHAFT	8.2	1	
33	T0215AVG0030N	ASSEMBLY, INPUT SHAFT	8.2	1	
34	T02150VG0190N	ASSEMBLY, OUTPUT SHAFT	8.2	1	
35	T0215DVG0260N	BUSH, 5TH GEAR	8.2	1	

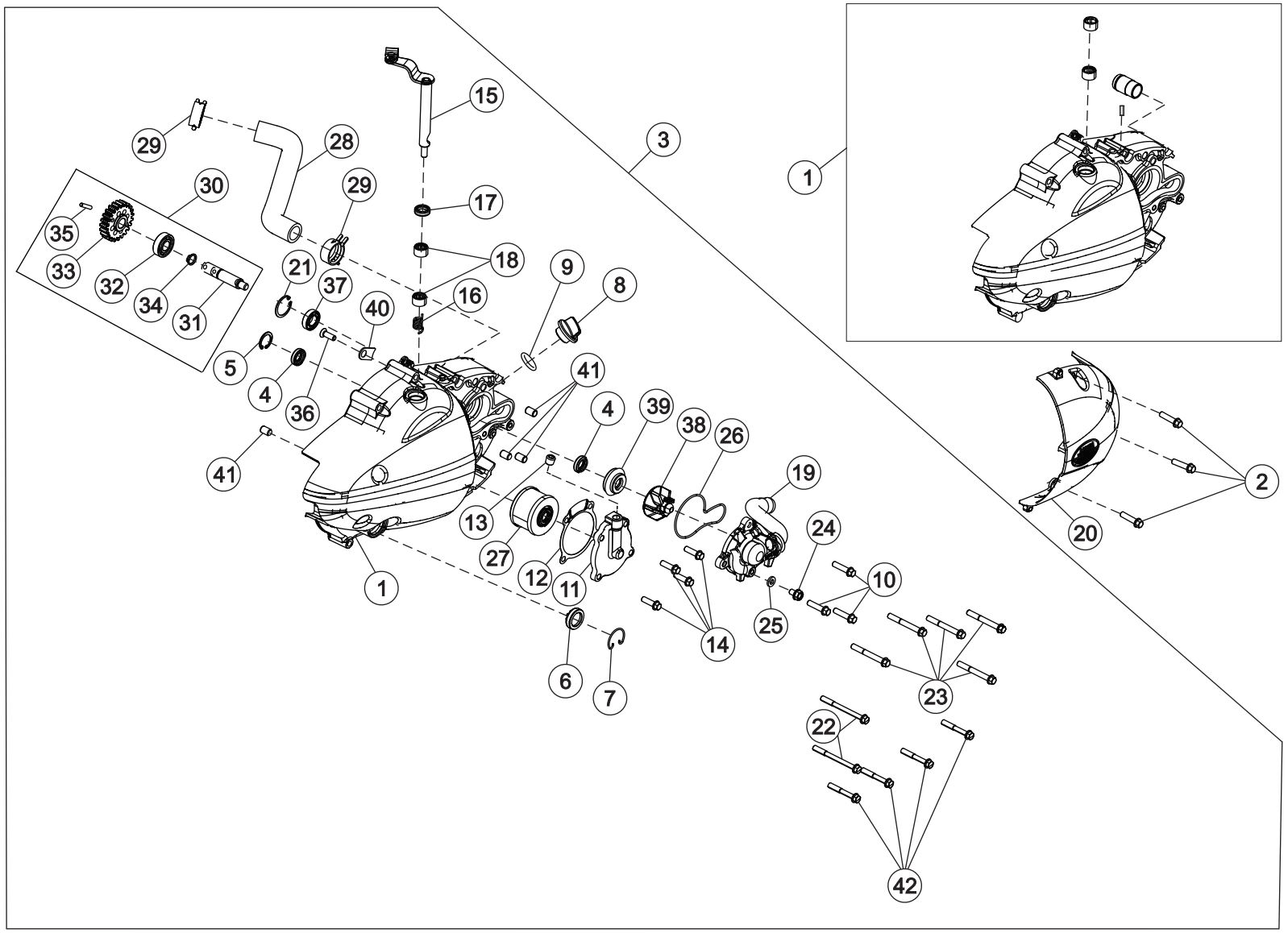
1
2
3
4
5
6
7
8
9
10
11
12
13
14
15
16
17
18
19
20
21
22
23
24
25
26
27
28
29
30
31
32
33
34
35
36
37
38
39
40
41
42

11 R CRANKCASE COVER

SR. NO.	PART NUMBERS	PART DESCRIPTION	FRT	QTY	REMARKS
1	T0202DVG1140E	COVER RH WITH OIL PLUG_BLACK MAT RAVEN TEXTURE	0.6	1	
2	SF0202349	SCREW HEX FL M6X1X28X8.8	0.2	3	
3	T0202DVG1060N	ASM COVER RH_BLACK MAT RAVEN TEXTURE	0.6	1	
4	T18020UF0110N	OIL SEAL CRANKSHAFT	0.8	2	
5	T0202DUF0750N	CIRCLIP - OIL SEAL CRANKSHAFT	0.8	1	
6	T02090UH0010N	LENS, OIL LEVEL CHECK	0.4	1	
7	T0202CUF2410N	WIRE CLIP GLASS WINDOW	0.1	1	
8	T0203BUF0250N	CAP OIL FILLER	0.2	1	
9	T0209AVN0300N	O RING CAP OIL FILLER	0.2	1	
10	SP0206021	BOLT, HEX FLANGE SH - M6X25	0.2	3	
11	T0202DVE0080N	COVER OIL FILTER C300	0.2	1	
12	T02090VE0030N	GASKET COVER OIL FILTER	0.2	1	
13	0302AB0560N	PLUG M8X1.25	0.2	1	
14	SP0906029	BOLT, FLANGE HEX HEAD SH M6X20	0.2	4	
15	T0219AVG0020N	ASSEMBLY CLUTCH LIFTER_BLACK MAT RAVEN TEXTURE	0.6	1	
16	T0219AUF0060N	CLUTCH LIFTER SPRING	0.6	1	
17	T18020UF0130N	OIL SEAL, CLUTCH LIFTER SHAFT (Ø11*Ø18*5) FKM	0.6	1	
18	T18050UF0220N	NEEDLE ROLLER BEARING (12*16*10)	0.8	2	
19	T0202DVE0130N	ASM COVER COOLANT PUMP	0.2	1	
20	T0202DVG1010N	SERVICE COVER RH WITHOUT LOGO_BLACK MAT RAVEN TEXTURE	0.1	1	
21	SF0602068	CIRCLIP INT - LUG 25X1.2	0.7	1	
22	SP0906033	BOLT, HEX FLANGE SH - M6X65	0.3	2	
23	SF0102646	BOLT HEX FL M6X1X50X8.8	0.3	5	
24	TSF0102281	FLANGE BOLT M6*10	0.2	1	
25	MJ01700005400	SEALING WASHER (6.2 X 12 X 2)	0.2	1	
26	T0209BVE0010N	O-RING, COVER COOLANT PUMP	0.2	1	
27	T0203BUF0260N	OIL FILTER ASSEMBLY	0.3	1	
28	T04000KW0050N	HOSE PIPE TO CYLINDER BLOCK	0.3	1	
29	T0401DKE0290N	SPRING BAND CLAMP DIA 24	0.3	2	
30	T0204AVE0070N	ASM COOLANT PUMP SHAFT	0.4	1	

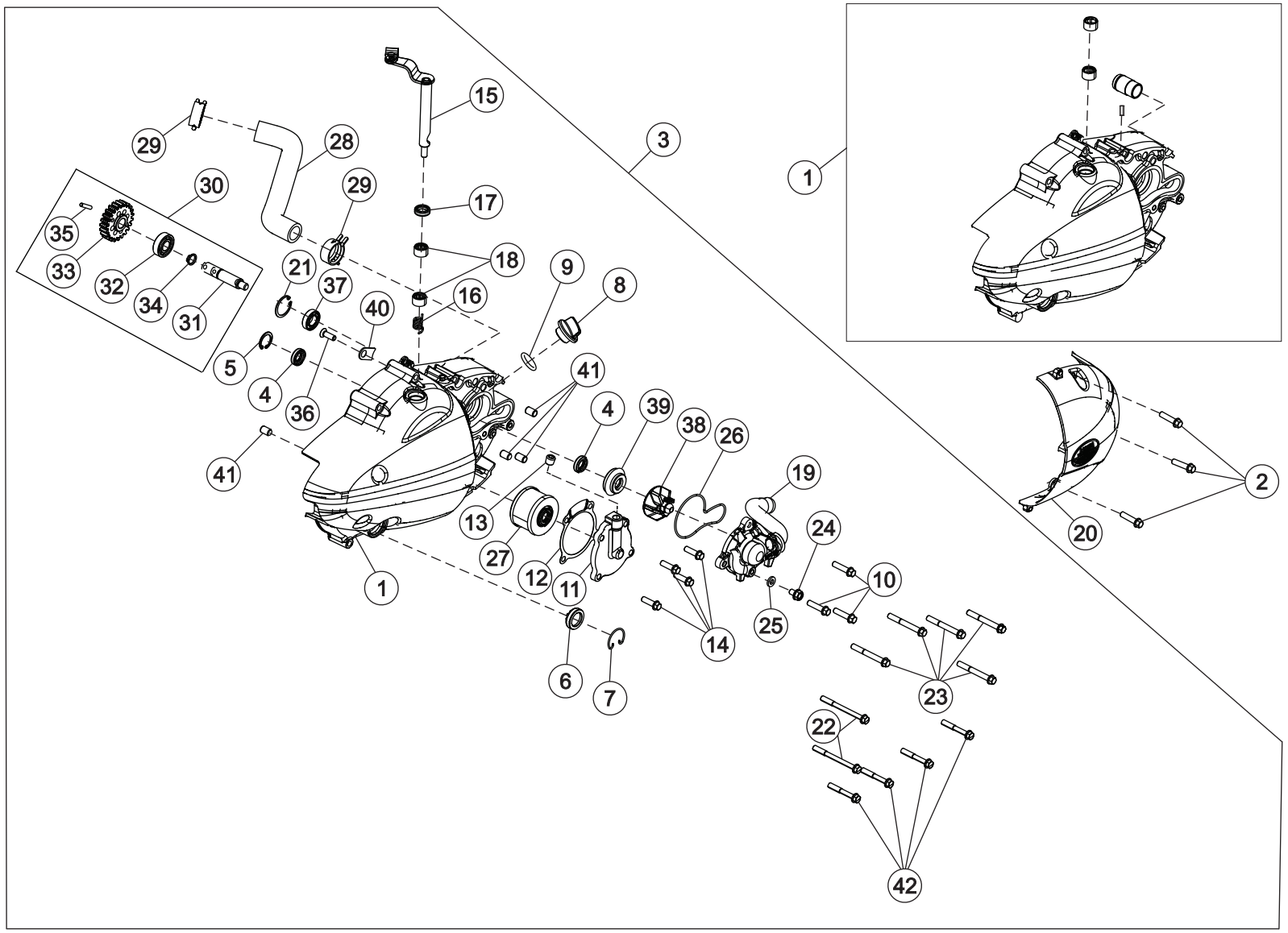
1
2
3
4
5
6
7
8
9
10
11
12
13
14
15
16
17
18
19
20
21
22
23
24
25
26
27
28
29
30
31
32
33
34
35
36
37
38
39
40
41
42

11 R CRANKCASE COVER

SR. NO.	PART NUMBERS	PART DESCRIPTION	FRT	QTY	REMARKS
31	T0401EVE0010N	SHAFT COOLANT PUMP	0.6	1	
32	MF01850000300	DG BALL BRG 12X28X8 6001	0.6	1	
33	T0401EVG0030N	COOLANT PUMP GEAR_BLACK MAT RAVEN TEXTURE	0.5	1	
34	SF0601216	CIRCLIP EXT - LUG 12X1.5	0.6	1	
35	T0202DUF0850N	PIN WATER PUMP GEAR	0.6	1	
36	SF0211009	SCREW FTCS CR SL M6X1X18X8.8	0.3	1	
37	SP010102309	BEARING DG BALL SR 12X24X6	0.3	1	
38	T0401EUF0030N	IMPELLER	0.6	1	
39	T0401EUF0040N	WATER SEAL	0.6	1	
40	T0401BVE0010N	PLATE RETAINER	0.3	1	
41	MJ01760000500	DOWEL PIN, HOLLOW (Ø8*12)	0.3	4	
42	SP0906032	FLANGE BOLT SH - M6 X 40	0.3	4	

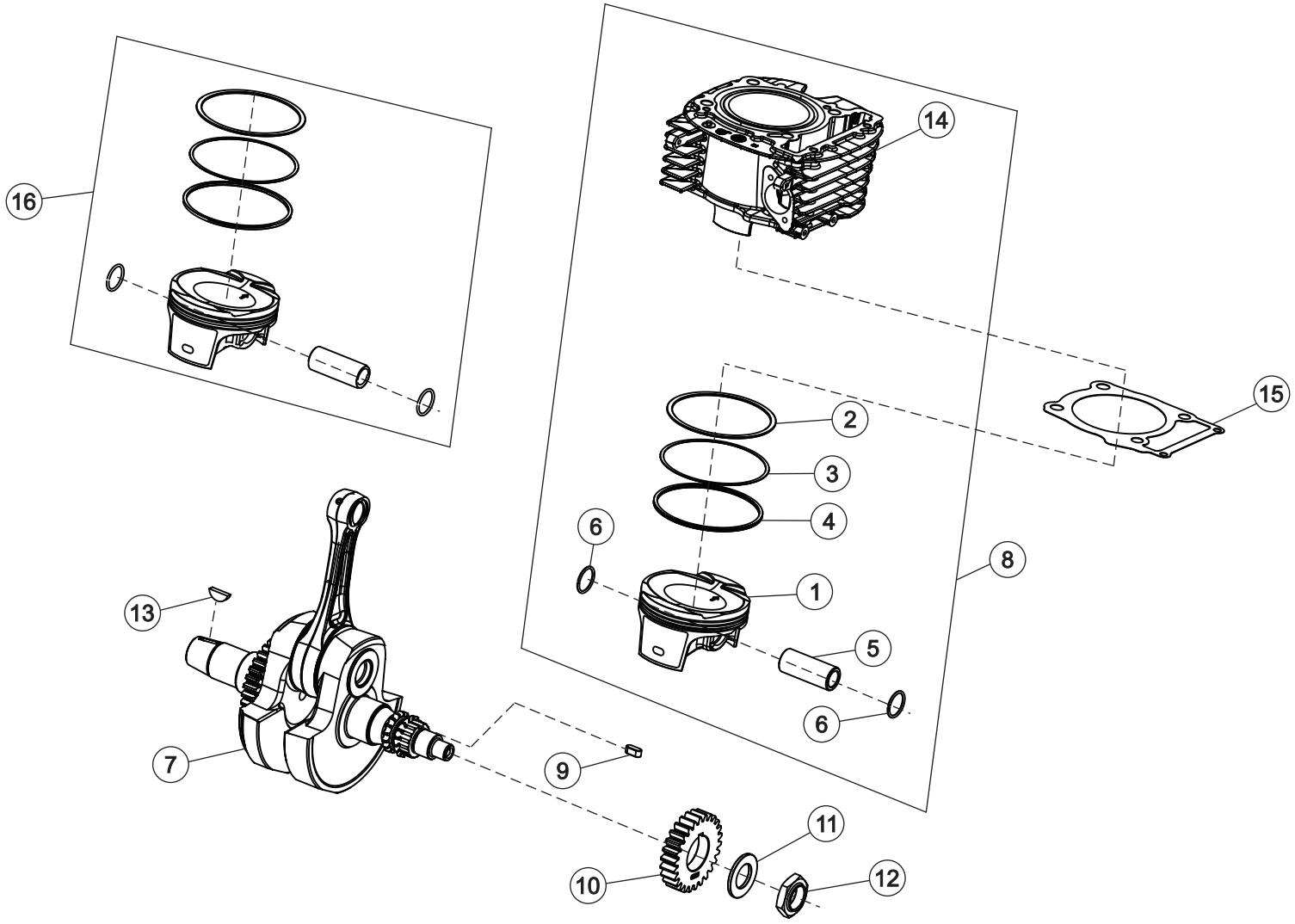
16
14
15
2
3
4
6
8
1
5
6
13
7
9
11
10
12

12 CRANKSHAFT AND PISTON

SR. NO.	PART NUMBERS	PART DESCRIPTION	FRT	QTY	REMARKS
1	T0210BVG0160N	PISTON_BLACK MAT RAVEN TEXTURE_GROUP-A	4.0	1	
1.1	T0210BVG0170N	PISTON_BLACK MAT RAVEN TEXTURE_GROUP-B	4.0	1	
2	T0210BVG0030N	RING PISTON TOP	4.0	1	
3	T0210BVG0040N	RING PISTON SECOND	4.0	1	
4	T0210BVG0050N	RING PISTON OIL	4.0	1	
5	T0210BVG0080N	PIN PISTON	4.0	1	
6	T0210BVG0070N	RING SNAP	4.0	2	
7	T0210AVG0010N	ASSEMBLY CRANKSHAFT	8.2	1	
8	T0202AVG0510E	KIT BLOCK PISTON_BLACK MAT RAVEN TEXTURE_GROUP-A	3.6	1	
8.1	T0202AVG0520E	KIT BLOCK PISTON_BLACK MAT RAVEN TEXTURE_GROUP-B	3.6	1	
9	T18080UF0020N	KEY PRIMARY DRIVE (5*5*12)	1.5	1	
10	T0215EVG0100N	GEAR, PRIMARY DRIVE (26T)	1.5	1	
11	T18010UF0020N	WASHER, GEAR PRIMARY DRIVE (<O>18.2*<O>29*3)	1.5	1	
12	T0210AUF0320N	LOCK NUT, GEAR PRIMARY DRIVE (M18*1.25)	1.5	1	
13	T1502AUF0170N	KEY WOODRUFF (4*13)	0.7	1	
14	T0202AVG0490E	KIT CYLINDER BLOCK WITH COOLANT PIPE BLACK MAT RAVEN TEXTURE_GROUP-A	3.4	1	
14.1	T0202AVG0500E	KIT CYLINDER BLOCK WITH COOLANT PIPE BLACK MAT RAVEN TEXTURE_GROUP-B	3.4	1	
15	T02090VG0040N	GASKET, CYLINDER BLOCK (MP15, 1.2T)	3.4	1	
16	T0210BVG0140N	ASSEMBLY PISTON_BLACK MAT RAVEN TEXTURE_GROUP-A	3.4	1	
16.1	T0210BVG0150N	ASSEMBLY PISTON_BLACK MAT RAVEN TEXTURE_GROUP-B	3.4	1	

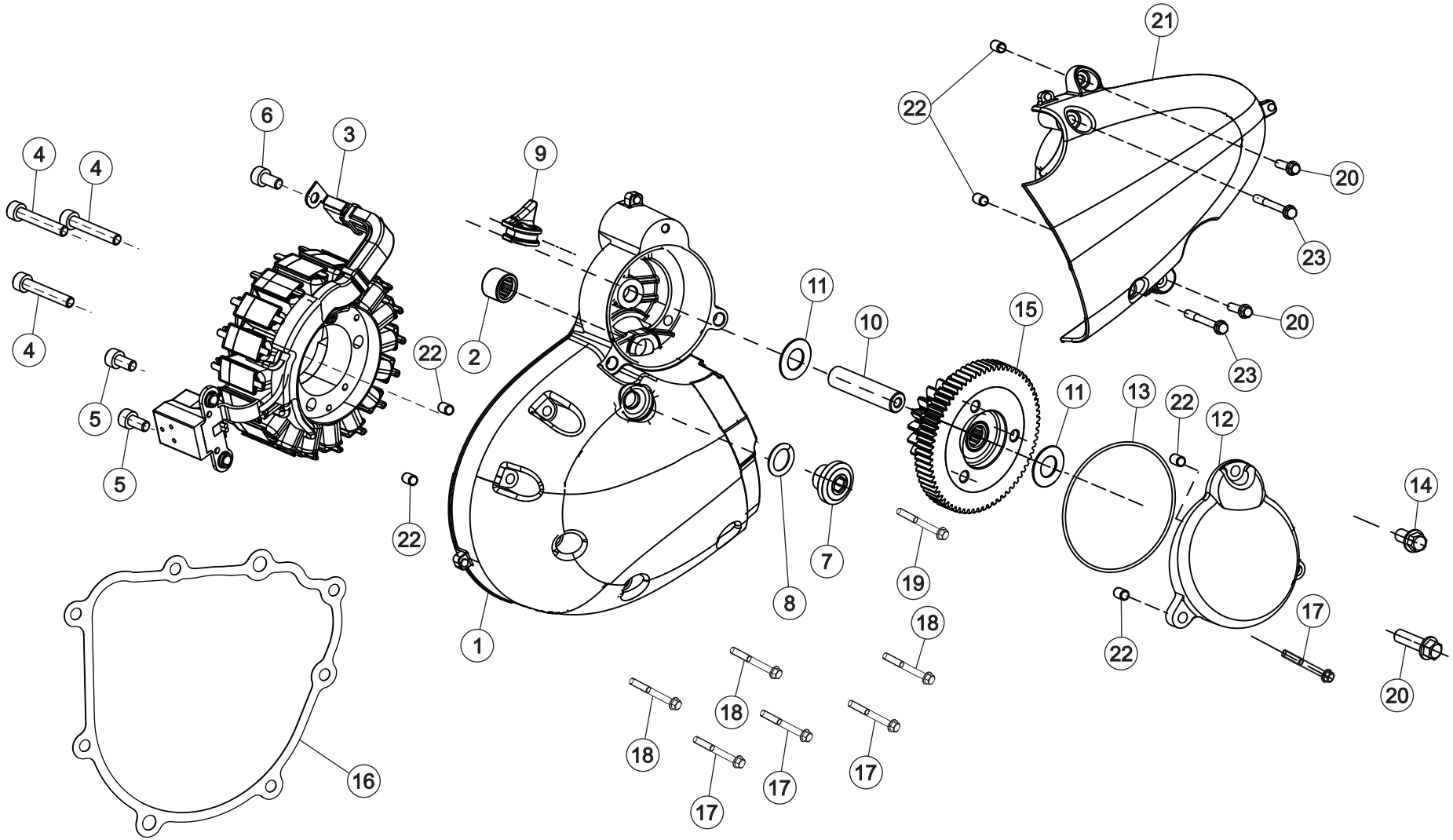
4
4
4
6
3
5
5
22
22
9
2
1
11
10
15
21
22
20
23
20
23
11
13
22
12
14
7
8
19
18
22
17
20
18
18
17
17
17
16

13 MAGNETO COVER LH

SR. NO.	PART NUMBERS	PART DESCRIPTION	FRT	QTY	REMARKS
1	T0202DVG0990N	COVER LH FRONT HIGH INERTIA MAGNETO_BLACK MAT RAVEN TEXTURE	0.3	1	
2	T18050UF0160N	NEEDLE BRG STARTER INTERIM	0.5	1	
3	T1502AVG0060N	STATOR ASSEMBLY (HIGHER INERTIA)	0.3	1	
4	TSF0224075	BOLT, HEX SOCKET HEAD - M5X30	0.7	3	
5	TSF0224077	BOLT, HEX SOCKET HEAD - M5X10	0.5	2	
6	SP0805020	PAN HEAD SCREW - M5X12	0.7	1	
7	T0202DVG1090N	GAUGE INSPECTION COVER_BLACK MAT RAVEN TEXTURE	0.1	1	
8	MJ01660001800	O-RING, GAUGE INSPECTION COVER	0.1	1	
9	T0209DVE0010N	RUBBER GROMMET MAGNETO COVER WIRE ROUTING	0.3	1	
10	T0205BUF0350N	SHAFT, STARTER COUNTER	0.1	1	
11	T18010UF0920N	WASHER_10.3*20*0.8 (STARTER INTRM GEAR)	0.1	2	
12	T0202DVG1040N	COVER STARTER COUNTER_BLACK MAT RAVEN TEXTURE	0.1	1	
13	SP040111500	O-RING, COVER GEAR STARTER COUNTER	0.1	1	
14	SP0906041	BOLT, HEX FLANGE SH-M6X12	0.1	1	
15	T0205BVG0040N	ASSEMBLY, SLIPPER CLUTCH WITH NRB	0.1	1	
16	T0209DUF0220N	GASKET- MAGNETO COVER	0.4	1	
17	SP0906038	BOLT, HEX FLANGE SH - M6X70	0.1	4	
18	SP0906043	BOLT, HEX FLANGE SH - M6X60	0.1	3	
19	TSF0102290	BOLT, HEX FLANGE SH - M6X35	0.1	1	
20	SF0202349	SCREW HEX FL M6X1X28X8.8	0.2	3	
21	T0202DVG1000N	COVER LH REAR HALF_BLACK MAT RAVEN TEXTURE	0.3	1	
22	MJ01760000500	DOWEL PIN, HOLLOW (Ø8*12)	0.1	6	
23	SF0102646	BOLT HEX FL M6X1X50X8.8	0.3	2	

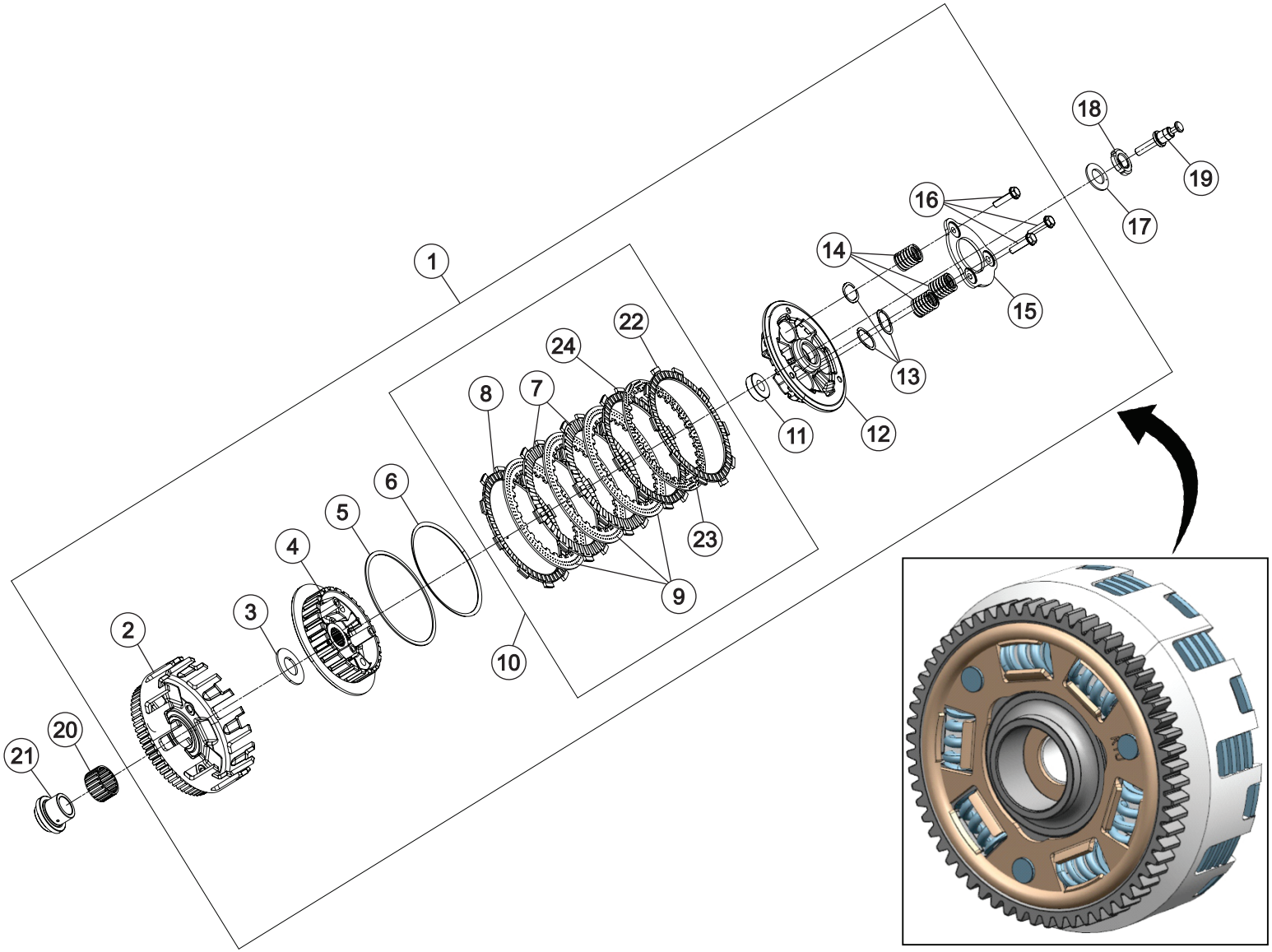
1
2
3
4
5
6
7
8
9
10
11
12
13
14
15
16
17
18
19
20
21
22
23
24

14 CLUTCH ASSEMBLY

SR. NO.	PART NUMBERS	PART DESCRIPTION	FRT	QTY	REMARKS
1	T02190VG0010N	ASSEMBLY, CLUTCH A&S	1.0	1	
2	T02180VG0010N	HOUSING COMPLETE CLUTCH WITH GPDN	1.4	1	
3	T0218BUF0460N	WASHER 20X40X2	1.0	1	
4	T0218BVG0040N	CLUTCH HUB	1.4	1	
5	T0218BVG0150N	SPRING SEAT JUDDER	1.4	1	
6	T0218BVG0140N	SPRING JUDDER	1.4	1	
7	T0218BVG0590N	DISK CLUTCH FRICTION MIDDLE SPD	1.0	2	
8	T0218BVG0060N	DISK CLUTCH FRICTION END SPD	1.0	1	
9	T0218BVG0070N	PLATE CLUTCH SPD	1.0	3	
10	T0218BVG0120N	CLUTCH PLATE AND FRICTION DISC KIT	1.0	1	
11	T0218BVG0110N	BEARING BALL	0.9	1	
12	T0218BVG0080N	PLATE CLUTCH PRESSURE	0.7	1	
13	T0218BVG0130N	SEAT SPRING CLUTCH	0.7	3	
14	T0218BVG0090N	SPRING CLUTCH	0.7	3	
15	T0218BVG0160N	PLATE STOPPER	0.7	1	
16	T0218BVG0100N	BOLT WASHER 6X25	0.7	3	
17	T18010UF0170N	WASHER CONICAL (Ø16.2*Ø27.2*2)	0.7	1	
18	T0218BUF0320N	CLUTCH NUT (M16*1)	0.7	1	
19	T0218BUF0360N	CLUTCH PULL ROD	0.7	1	
20	T18050UF0300N	NEEDLE ROLLER BEARING (Ø28*Ø33*17)	1.4	1	
21	T0218BUF0210N	CLUTCH BUSHING E02 (NRB VERSION)	1.4	1	
22	T0218BVG0180N	DISK B, CLUTCH FRICTION SPD	1.0	1	
23	T0218BVG0170N	PLATE B, CLUTCH SPD	1.0	1	
24	T0218BVG0600N	DISK D CLUTCH FRICTION SPD	1.0	1	

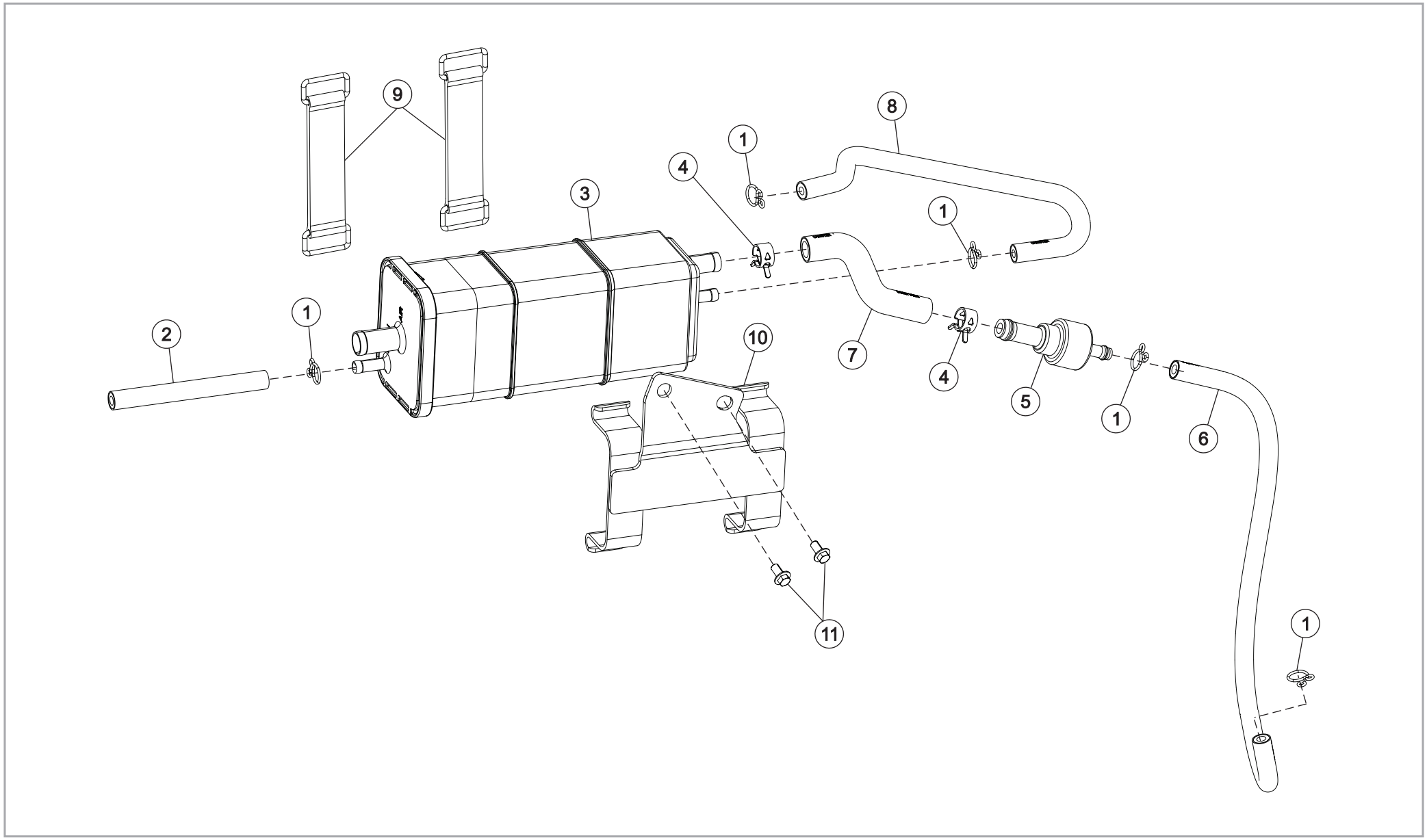
9
8
1
4
3
1
2
1
10
7
4
5
1
6
1
11

15 EVAPORATIVE EMISSION SYSTEM

SR. NO.	PART NUMBERS	PART DESCRIPTION	FRT	QTY	REMARKS
1	95002-02080	CLIP TUBE B8	0.4	4	
2	T10000KW0090N	DRAIN TUBE CANISTER	0.4	1	
3	T10000KE0021N	CARBON CANISTER	0.4	1	
4	T10050KE0100N	SPRING BAND CLAMP DIA 11	0.4	2	
5	T10000KE0031N	CHECK VALVE	0.4	1	
6	T10000Y50120N	HOSE CHECK VALVE TO 38 DIA THROTTLE BODY	0.4	1	
7	T10000KW0110N	HOSE CANISTER TO CHECK VALVE	0.4	1	
8	T10010KW0190N	HOSE ROLLOVER VALVE TO CANISTER	0.4	1	
9	T14010KE0010N	TOOL KIT BAND	0.3	2	
10	T10000KW0070N	BRACKET BS-IV CANISTER MOUNTING LOOSE	0.4	1	
11	SP0906041	FLANGED HEADBOLT M6X12	0.4	2	

16 AIR FILTER ASSEMBLY

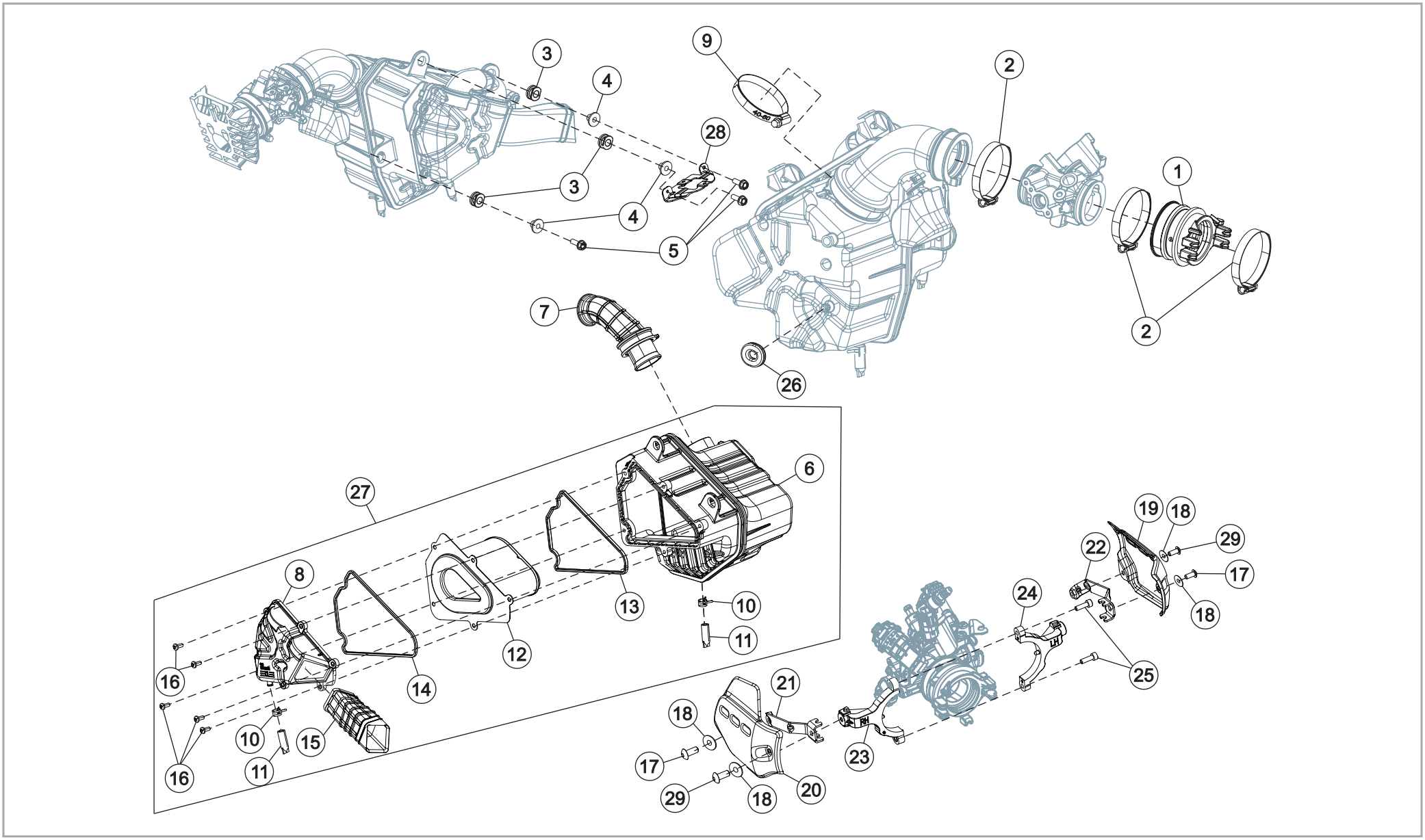

16 AIR FILTER ASSEMBLY

SR. NO.	PART NUMBERS	PART DESCRIPTION	FRT	QTY	REMARKS
1	T01010Y50020N	INLET MANIFOLD	0.5	1	
2	SF0700025	CLAMP SPECIAL M60X0.7X9	0.3	3	
3	T13160KG0130N	GROMMET STRUCTURE MOUNTING	0.5	3	
4	T13160KG0210N	COLLAR FAIRING MOUNTING	0.5	3	
5	SP0906029	FLANGE BOLT M6*20	0.5	3	
6	T01010J30020N	TOP AND BOTTOM CASE ASSEMBLY	0.8	1	
7	T01010J30120N	OUTLET DUCT_38 DIA	0.5	1	
8	T01010J30070N	INLET COVER ASSEMBLY	0.4	1	
9	SF0700042	CLAMP SPECIAL 70X0.65X9	0.2	1	
10	T0101AKW0070N	HOSE CLIP	0.2	2	
11	T0101AKW0060N	DRAIN TUBE WATER	0.4	2	
12	T0102DJ30010N	FILTER ELEMENT ASSEMBLY	0.4	1	
13	T01010J30050N	GASKET B	0.4	1	
14	T01010J30060N	GASKET A	0.4	1	
15	T01010J30080N	INLET DUCT MAIN	0.5	1	
16	TSF0212010	SCREW M5	0.5	5	
17	SF0212039	SCREW RDSKT SL M5X0.8X8X8.8	0.2	2	
18	MF01700001300	NYLON WASHER	0.2	4	
19	T13120KW0010T	COVER THROTTLE BODY LH	0.2	1	
20	T13120KW0020T	COVER THROTTLE BODY RH	0.2	1	
21	T13010KW0190N	BKT COVER THROTTLE BODY MTG RH	0.2	1	
22	T13010KW0180N	BKT COVER THROTTLE BODY MTG LH	0.2	1	
23	T13010KW0320N	HOLDER COVER THROTTLE BODY RH-J1 UPGRADE	0.2	1	
24	T13010KW0310N	HOLDER COVER THROTTLE BODY LH-J1 UPGRADE	0.2	1	
25	SF0105067	HEX SOC CAP HEAD SCREW M5*16*0.8	0.2	2	
26	T13010KT0140N	GROMMET SIDE COVER FRONT	0.2	1	
27	T01010J30010N	AIR FILTER BOX ASSY	0.4	1	
28	T08000J30090N	RR MOUNTING LOOSE BRACKET	0.5	1	
29	SF0212036	SCREW RDSKT M5X0.8X16X8.8	0.2	2	

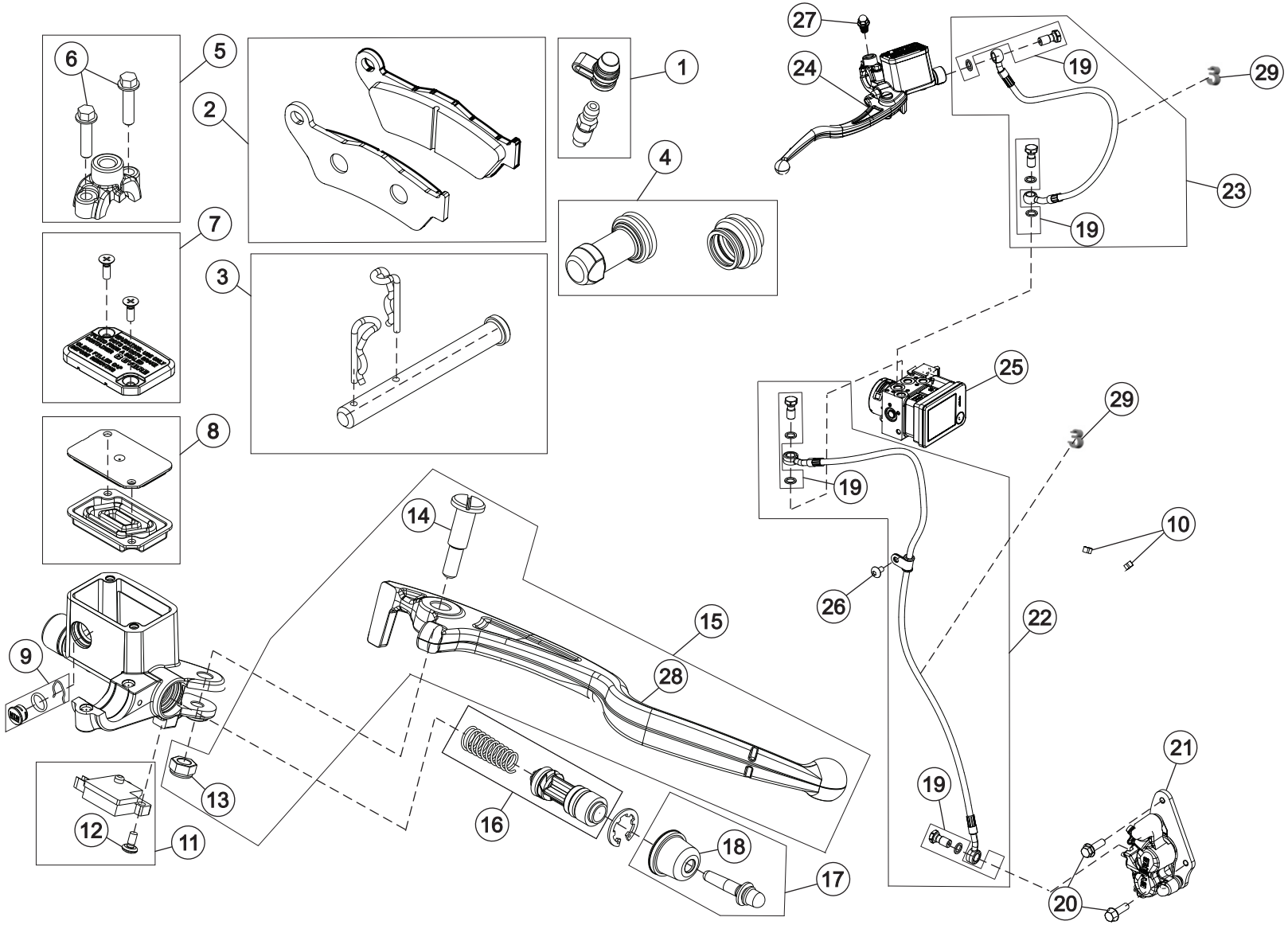
1
2
3
4
5
6
7
8
9
10
11
12
13
14
15
16
17
18
19
20
21
22
23
24
25
26
27
28
29

17 BRAKE SYSTEM FRONT

SR. NO.	PART NUMBERS	PART DESCRIPTION	FRT	QTY	REMARKS
1	T1901KKW0020N	BLEEDER KIT	0.5	1	
2	T2501BJ30010N	FRONT BRAKE PAD KIT	0.3	1	
3	T1901KKW0030N	PAD SPRING KIT	0.3	1	
4	T1901KKW0060N	BOOT KIT	0.4	1	
5	T1901HKW0060N	MASTER CYLINDER UPPER HOLDER	0.1	1	
6	T1901HKW0050N	BOLT MASTER CYLINDER	0.1	2	
7	T1901HKW0020N	RESERVOIR KIT	0.2	1	
8	T1901HKW0100N	DIAPHRAM KIT	0.2	1	
9	T1901HKW0090N	OIL LEVEL WINDOW KIT	0.3	1	
10	T1501AKW0070N	DOUBLE CABLE CLIP_REV0_L1_A2	0.2	5	
11	T1901HKW0070N	FRONT BRAKE SWITCH ASSY	0.2	1	
12	T1901HKW0080N	BRAKE SWITCH SCREW	0.1	1	
13	T1901CKW0030N	FRONT BRAKE LEVER NUT	0.1	1	
14	T1901CKW0020N	FRONT BRAKE LEVER BOLT	0.1	1	
15	T2501DJ30020N	FRONT BRAKE LEVER KIT	0.1	1	
16	T1901HKW0030N	MASTER CYLINDER PISTON KIT	0.8	1	
17	T1901KKW0100N	PUSH ROD ASSLY KIT	0.8	1	
18	T1901HKW0110N	RUBBER_MASTER CYLINDER	0.8	1	
19	T1901JKW0020N	BANJO BOLT KIT	0.7	4	
20	SF0102642	BOLT HEX FL M8X1.25X35X10.9	0.2	2	
21	T1901KJ30010N	CALIPER FRONT BRAKE RH	0.8	1	
22	T2501HKW0040N	HOSE, ABS TO FRONT CALIPER_KIT_DUAL CHANNEL	0.9	1	
23	T2501HJ20040N	HOSE, FRONT M/C TO ABS KIT	0.9	1	
24	T2501DJ30010N	FRONT MASTER CYLINDER	0.5	1	
25	T2501AKW0021N	WET ABS UNIT_DUAL CHANNEL	0.5	1	
26	SF0212037	SCREW RDSKT M6X1X12X8.8	0.2	1	
27	T0701CJ30020N	PLUG CAP RH	0.1	1	
28	T2501DJ30030N	BRAKE LEVER, FRONT	0.2	1	
29	SF5201005	CLIP CONSTANT 8X4.75	0.1	2	

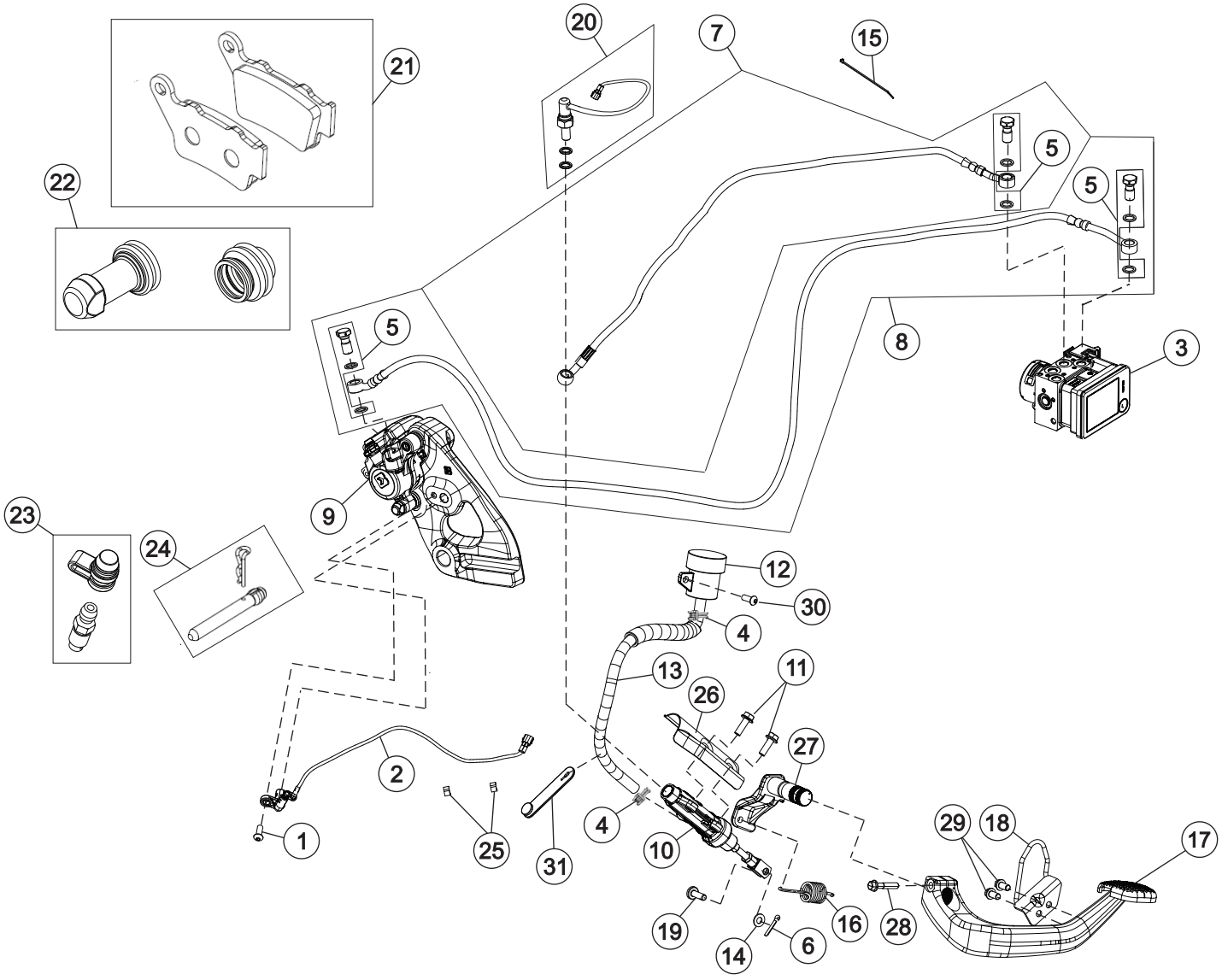
20
7
15
21
5
5
22
5
8
3
9
23
24
12
30
4
13
26
11
27
2
1
25
31
4
10
29
18
17
19
14
6
16
28

18 BRAKE SYSTEM REAR

SR. NO.	PART NUMBERS	PART DESCRIPTION	FRT	QTY	REMARKS
1	TSF0224080	SOCKET HEAD SCREW M6x16 BLACK (LOCKTITE)	0.2	1	
2	T0602FKE0010N	SPEED SENSOR FRONT WHEEL_M104	0.6	1	
3	T2501AKW0021N	WET ABS UNIT_DUAL CHANNEL	0.5	1	
4	T25000KW0010N	REAR RESERVOIR HOSE CLIP	0.1	2	
5	T1901JKW0020N	BANJO BOLT KIT	0.7	3	
6	MF01920001500	A02-SPLIT PIN 2 x 16 IS:549	0.2	1	
7	T2501HJ30080N	HOSE, ABS TO REAR MASTER CYLINDER_KIT	0.8	1	
8	T2501HJ30060N	HOSE, ABS TO REAR CALIPER_KIT	0.8	1	
9	T2001CKW0040N	CALIPER ASSY, REAR BRAKE RH	0.8	1	
10	T2501EJ30050N	MASTER CYLINDER ASSY -REAR (Ø 12)	0.8	1	
11	SF0202347	SCREW HEX FL M6X1X20X8.8	0.5	2	
12	T25010KE0030N	RESERVOIR ABS	0.2	1	
13	T2501EJ30070N	HOSE RESERVOIR_J302	0.2	1	
14	T0208AVF0140N	WASHER 6.5X12.7X1_BOBBER UG	0.2	1	
15	T1501AKE2050E	CABLE STRAP 200MM	0.2	4	
16	T2001BJ30010N	RETURN SPRING, REAR BRAKE PEDAL	0.4	1	
17	T20010J30030N	REAR BRAKE LEVER COMPLETE	0.4	1	
18	T2001CJ30020N	WIRE GUIDE	0.2	1	
19	T25000KE0310N	LOCKING PIN	0.1	1	
20	T2501EKW0020N	REAR MASTER CYL PRESSURE SWITCH KIT	0.5	1	
21	T2001KKW0020N	REAR BRAKE PAD KIT	0.3	1	
22	T2001KKW0040N	BOOT KIT	0.4	1	
23	T2001KKW0010N	BLEEDER SCREW KIT	0.5	1	
24	T2001KKW0030N	PAD PIN KIT	0.2	1	
25	T1501AKW0070N	DOUBLE CABLE CLIP_REV0_L1_A2	0.1	2	
26	T20000J30010N	COVER REAR MASTER CYLINDER	0.2	1	
27	T2001CJ30030N	PIVOT LINK REAR BRAKE LEVER	0.5	1	
28	SF0102034	FLANGE BOLT SH M6X28	0.1	1	
29	SP0906041	FLANGED HEAD BOLT-SH M6X12	0.1	2	
30	SF0212023	SCREW RDSKT M6X1X12XA2-70	0.1	1	

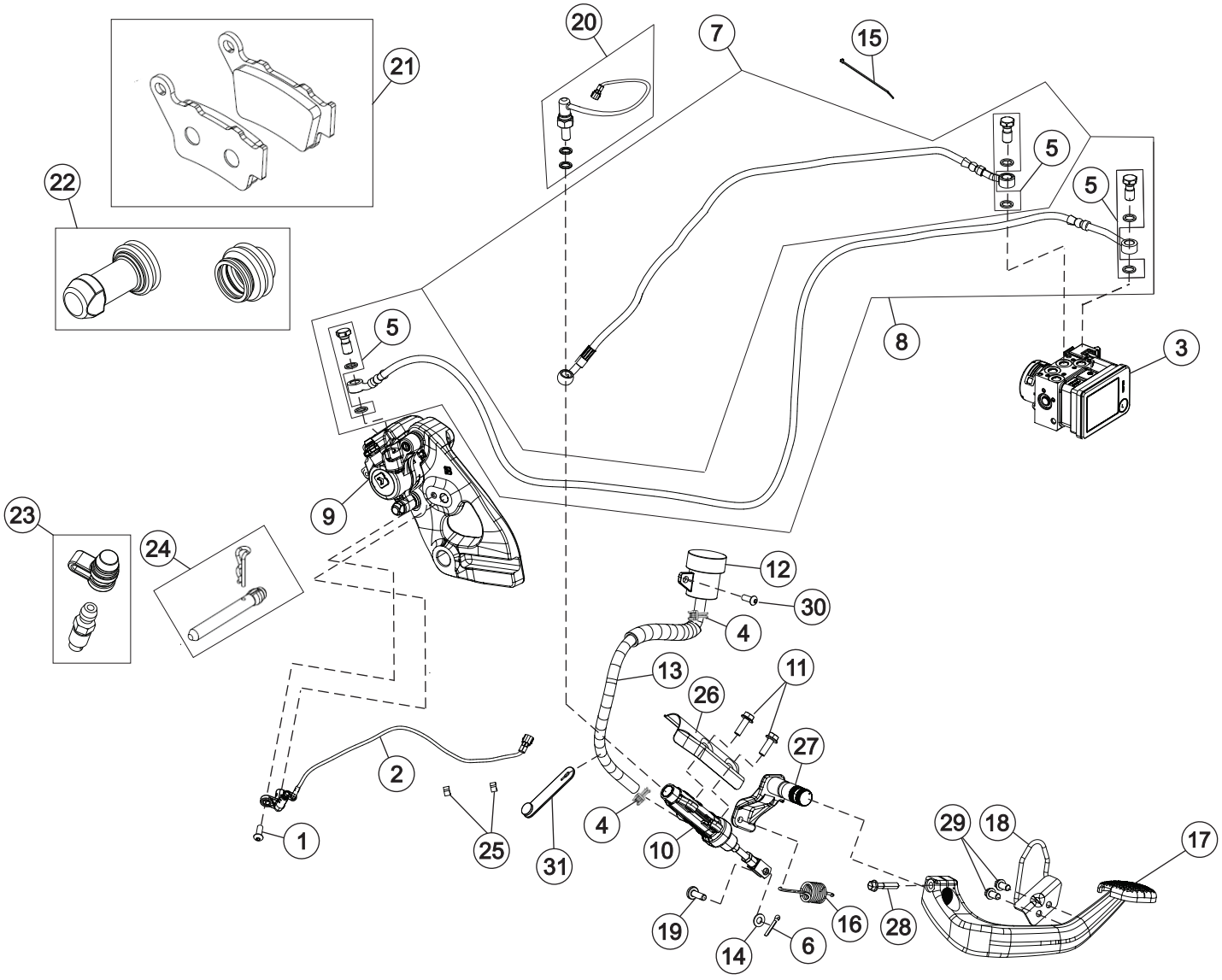
20
7
15
21
5
5
22
5
8
3
9
23
24
12
30
4
13
11
26
27
2
4
10
1
25
31
29
18
17
19
14
6
16
28

SR. NO.	PART NUMBERS	PART DESCRIPTION	FRT	QTY	REMARKS
31	T08000B10410N	RUBBER STRAP 60 MM	0.1	1	

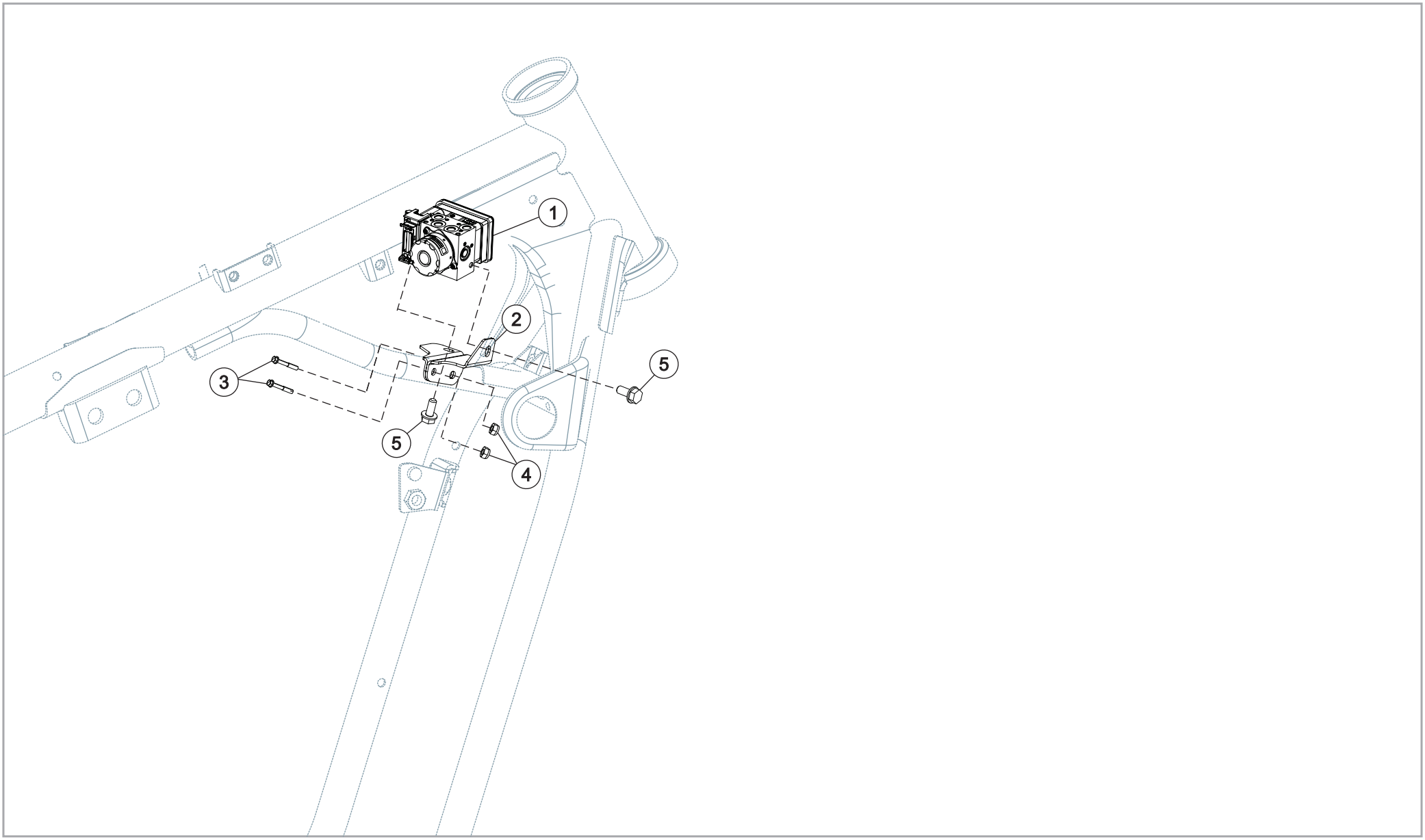
1
2
3
5
5
4

19 ANTI-LOCK BRAKING SYSTEM (ABS)

SR. NO.	PART NUMBERS	PART DESCRIPTION	FRT	QTY	REMARKS
1	T2501AKW0021N	WET ABS UNIT_DUAL CHANNEL	0.5	1	
2	T08000KW0380N	DUAL CHANNEL ABS MOUNTING BRACKET	0.5	1	
3	SP0906032	FLANGE BOLT SH - M6 X 40	0.2	2	
4	TSF0318007	M6 NYLOC NUT (BLACK)	0.2	2	
5	TSF0102282	FLANGE BOLT M6*14	0.2	2	

20 FRONT WHEEL ASSEMBLY

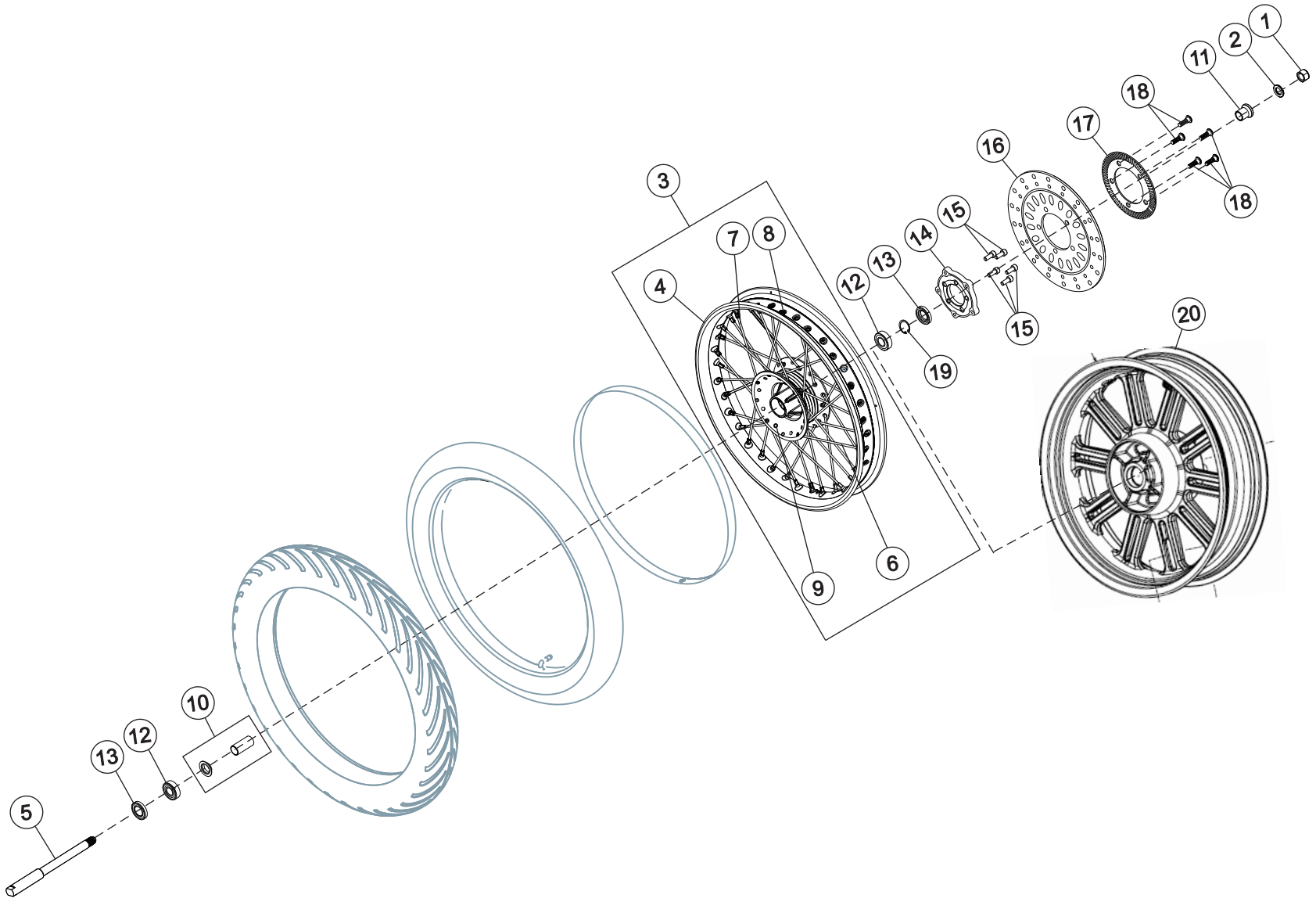

20 FRONT WHEEL ASSEMBLY

SR. NO.	PART NUMBERS	PART DESCRIPTION	FRT	QTY	REMARKS
1	TSF0318003	SELF LOCK NUT M16	0.2	1	
2	TSF0400010	WASHER 16 MM	0.2	1	
3	T06010J30020N	RIM ASSY, FRONT, J3	1.0	1	
4	T0601AB10010N	ALLOY RIM, SPOKE WHEEL FRONT (MT2.50X18)	1.0	1	
5	T0601GKW0040N	AXLE, FRONT WHEEL	0.2	1	
6	T0601JJ30010N	INNER SPOKE, FRONT_J3	1.0	18	
7	T0601JJ30020N	OUTER SPOKE, FRONT_J3	1.0	18	
8	T0601JKW0030D	SPOKE NIPPLE	1.0	36	
9	T0601HKW0020E	FRONT WHEEL HUB COMP, MACHINING	1.0	1	
10	T0601CKW0050N	SPACER ASSY INNER, FRONT WHEEL	0.2	1	
11	T0601CKW0020N	EXTERNAL SPACER RH	0.3	1	
12	T0601DKW0021N	WHEEL BEARING 6203 (17x40x12)	0.9	2	
13	T0601EKW0021N	FRONT DUST SEAL (A22x40x7)	0.5	2	
14	T0601HKW0030E	COUPLER FOR FRONT HUB & DISC, MACHINING	0.6	1	
15	SP0308009	SOCKET HEAD SCREW M8X20 (10.9 GRADE)	0.2	5	
16	T0601AKW0020N	FRONT DISC (RH, D=280)	0.8	1	
17	T0602LKE0010N	TONER WHEEL FRONT	0.6	1	
18	SF0200097	SCREW SPECIAL M8X1.25X28XA2-70	0.2	5	
19	SF0602007	CIRCLIP INT - LUG 40X1.75XPH	0.5	1	
20	T0601AKW0040N	ALLOY WHEEL FRONT, MT 2.5X18	1.0	1	

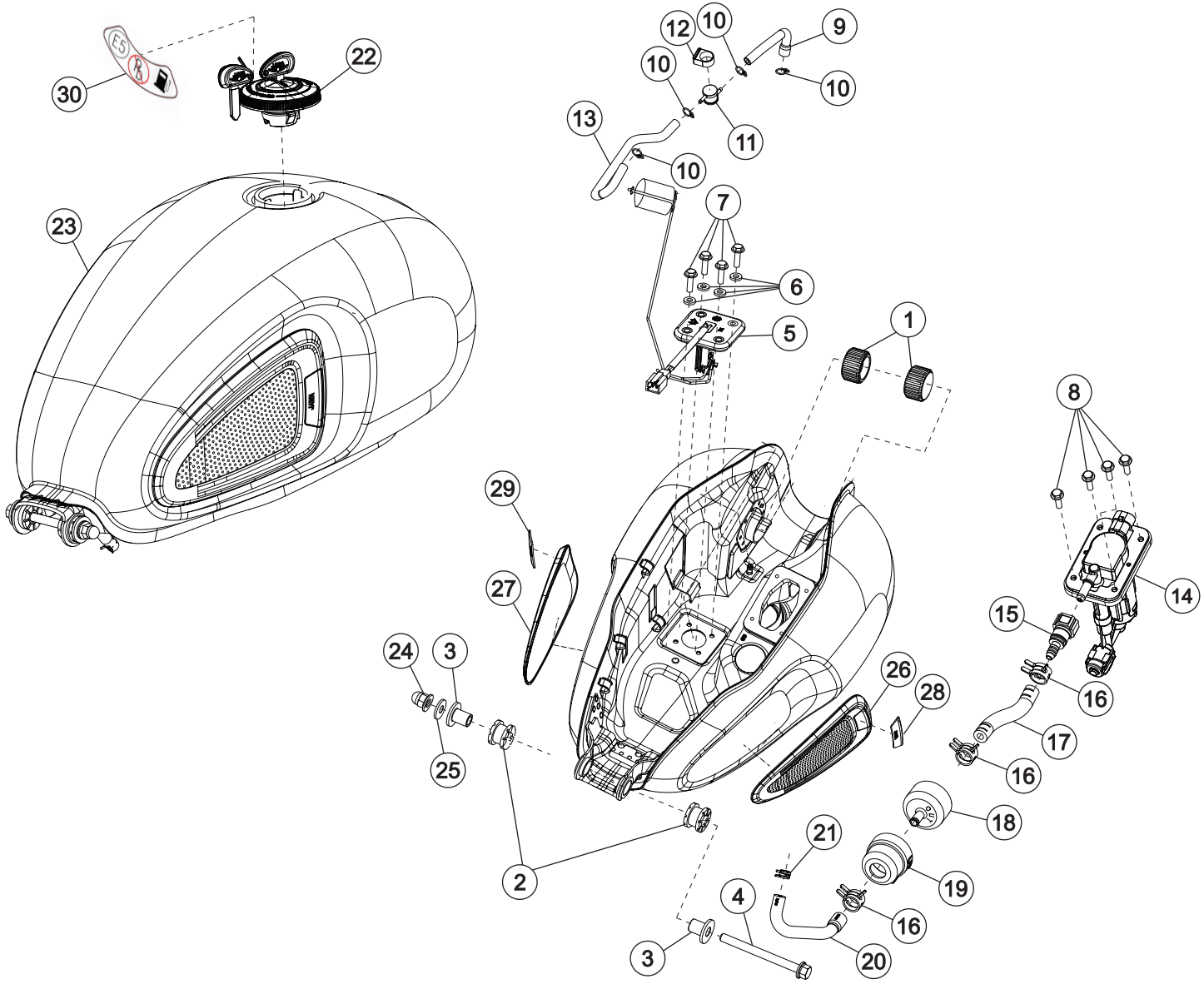
30
22
23
12
10
9
10
10
11
13
10
7
6
5
1
8
29
27
24
3
25
26
28
14
15
16
17
16
18
21
19
2
4
16
3
20

21 FUEL TANK ASSEMBLY

SR. NO.	PART NUMBERS	PART DESCRIPTION	FRT	QTY	REMARKS
1	T10000Y50200N	DAMPER TANK FRONT MOUNTING	0.6	2	
2	T10010J30040N	GROMMET TANK MOUNTING BRACKET REAR	0.6	2	
3	T10000J30010N	COLLAR FUEL TANK MOUNTING	0.6	2	
4	SF0105021	BOLT SOCKET M8X1.25X90X8.8	0.4	1	
5	T1501PKW0010N	FUEL SENSOR UNIT	0.6	1	
6	T10030KM0060N	WASHER (FUEL GAUGE ASSY)	0.5	4	
7	SF0102046	HEX FLANGE BOLT M5X18	0.5	4	
8	SF0105067	HEX SOC CAP HEAD SCREW M5*16*0.8	0.5	4	
9	T10000KW0100N	HOSE TANK TO ROLLOVER VALVE	0.5	1	
10	95002-02080	CLIP TUBE B8	0.5	4	
11	T10000KW0040N	ROLL OVER VALVE	0.5	1	
12	T10000KW0170N	ROLL OVER VALVE GROMMET	0.5	1	
13	T10010KW0190N	HOSE ROLLOVER VALVE TO CANISTER	0.5	1	
14	T10050J20010N	FUEL PUMP	0.6	1	
15	T10050KE0050N	QUICK FUEL CONNECTOR 2	0.5	1	
16	T10050KE0030N	SPRING BAND CLAMP DIA 14	0.6	3	
17	T10000KW0020N	FUEL TUBE OUTLET	0.5	1	
18	MH00340000100	FUEL FILTER	0.5	1	
19	MH00900000800	SUPPORT FILTER	0.5	1	
20	T10010KW0140N	FUEL TUBE INLET	0.5	1	
21	T10050KE0100N	SPRING BAND CLAMP DIA 11	0.5	1	
22	T10020KW0050N	FUEL TANK CAP WITH KEY	0.1	1	
23	T17030J30270A	FUEL TANK WITH KNEE PADS & DECALS (WHITE_RED) EU-V	0.8	1	
23.1	T17030J30270E	FUEL TANK WITH KNEE PADS & DECALS (CHROME_BLACK) EU-V	0.8	1	
23.2	T17030J30270J	FUEL TANK WITH KNEE PADS & DECALS (MYSTIC_COPPER) EU-V	0.8	1	
23.3	T17030J30270B	FUEL TANK WITH KNEE PADS & DECALS (SIRIUS-MOONSTONE WHITE) EU-V	0.8	1	
23.4	T17030J30270U	FUEL TANK WITH KNEE PADS & DECALS (CHROME_RED) EU-V	0.8	1	
24	SF0300075	NUT SPECIAL M8X1.25X17X8	0.4	1	
25	TSF0401129	WASHER M8 (8.4X17X1.6)	0.4	1	
26	T10010J30150N	KNEE PAD LH	0.3	1	

21 FUEL TANK ASSEMBLY

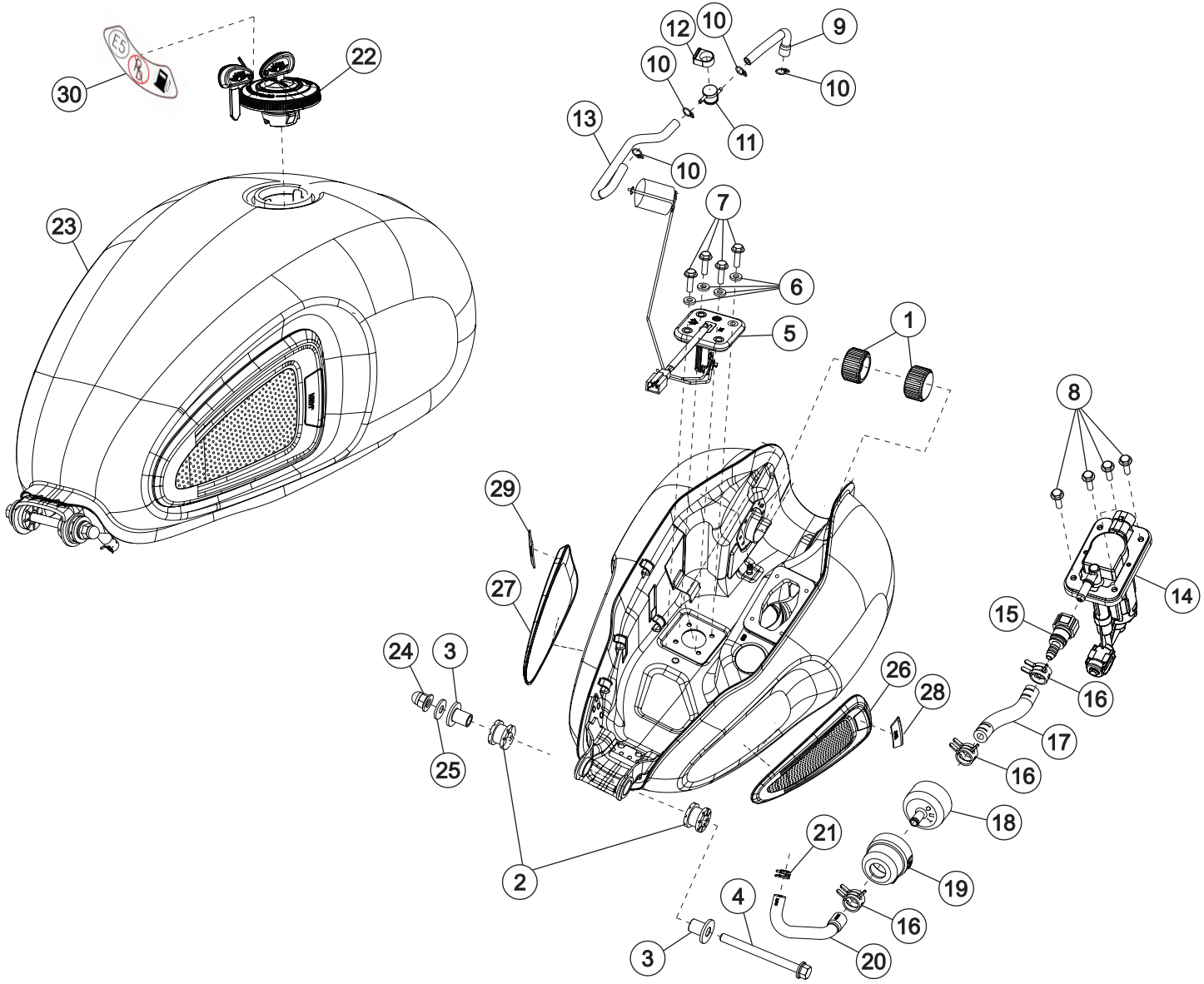

21 FUEL TANK ASSEMBLY

SR. NO.	PART NUMBERS	PART DESCRIPTION	FRT	QTY	REMARKS
27	T10010J30140N	KNEE PAD RH	0.3	1	
28	T10010J30160N	BADGE KNEE PAD LH	0.3	1	
29	T10010J30170N	BADGE KNEE PAD RH	0.3	1	
30	T10020KW0020N	FUEL TYPE LABEL STICKER	0.1	1	

22 FRONT MUDGUARD ASSEMBLY

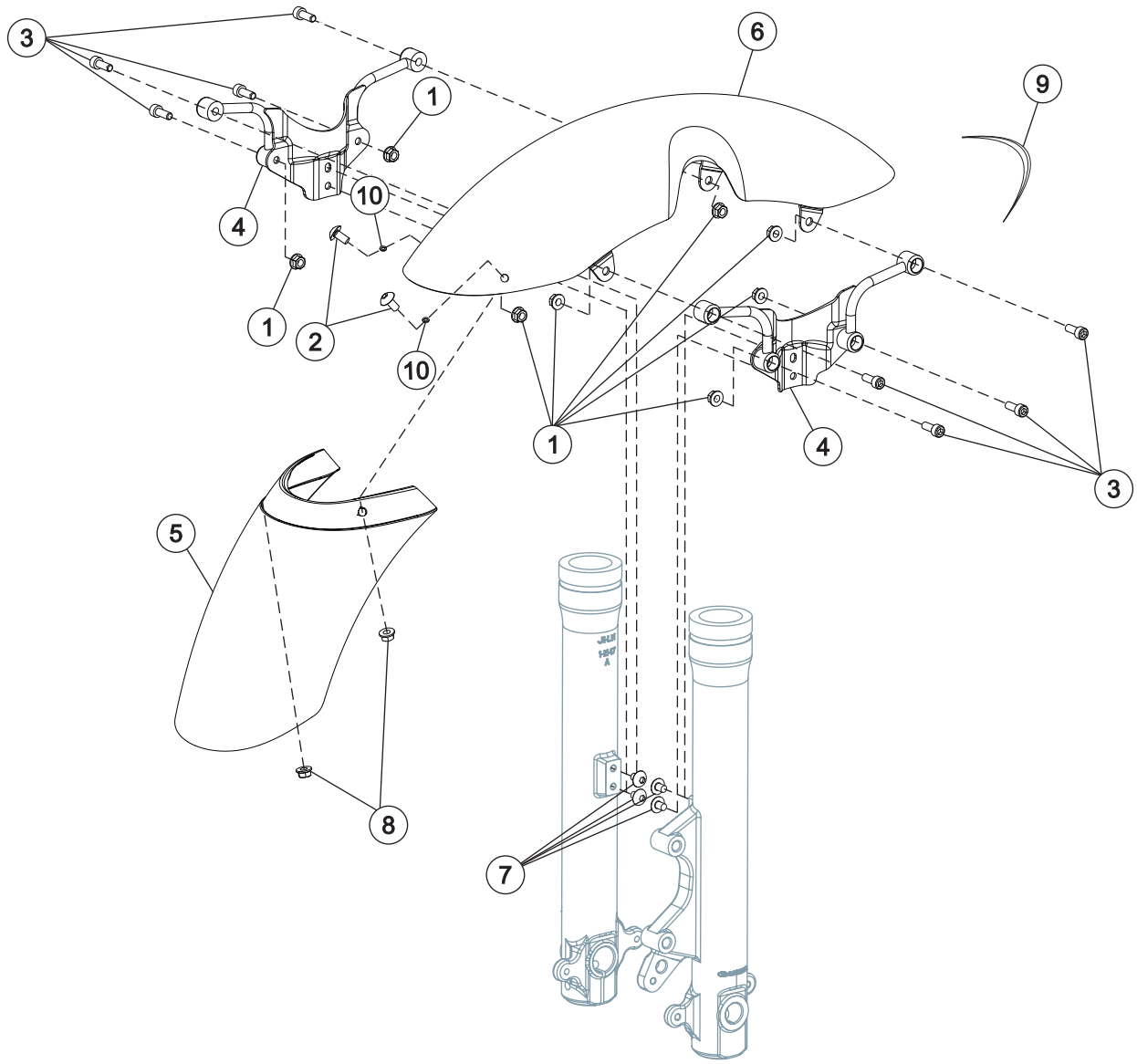

22 FRONT MUDGUARD ASSEMBLY

SR. NO.	PART NUMBERS	PART DESCRIPTION	FRT	QTY	REMARKS
1	65538380	NUT FLANGE 6 MM	0.3	8	
2	TSF0212011	BUTTON HEAD SOCKET SCREW M6X16	0.2	2	
3	SF0224110	SCREW SOCKET M6X1X20X8.8	0.2	8	
4	T13060J30080N	FRONT FENDER STAY	0.3	2	
5	T13060J30090N	FRONT FENDER MUD FLAP	0.3	1	
6	T13060J30070W	FRONT FENDER - BLACK GLOSS	0.8	1	
7	SF0212030	SCREW RDSKT M6X1X8X8.8	0.3	4	
8	TSF0318007	M6 NYLOC NUT (BLACK)	0.3	2	
9	T1306AKW0030N	BEADING FRONT FENDER	0.3	1	
10	TSF0401132	WASHER M6 (6.5 X 12 X 2)	0.2	2	

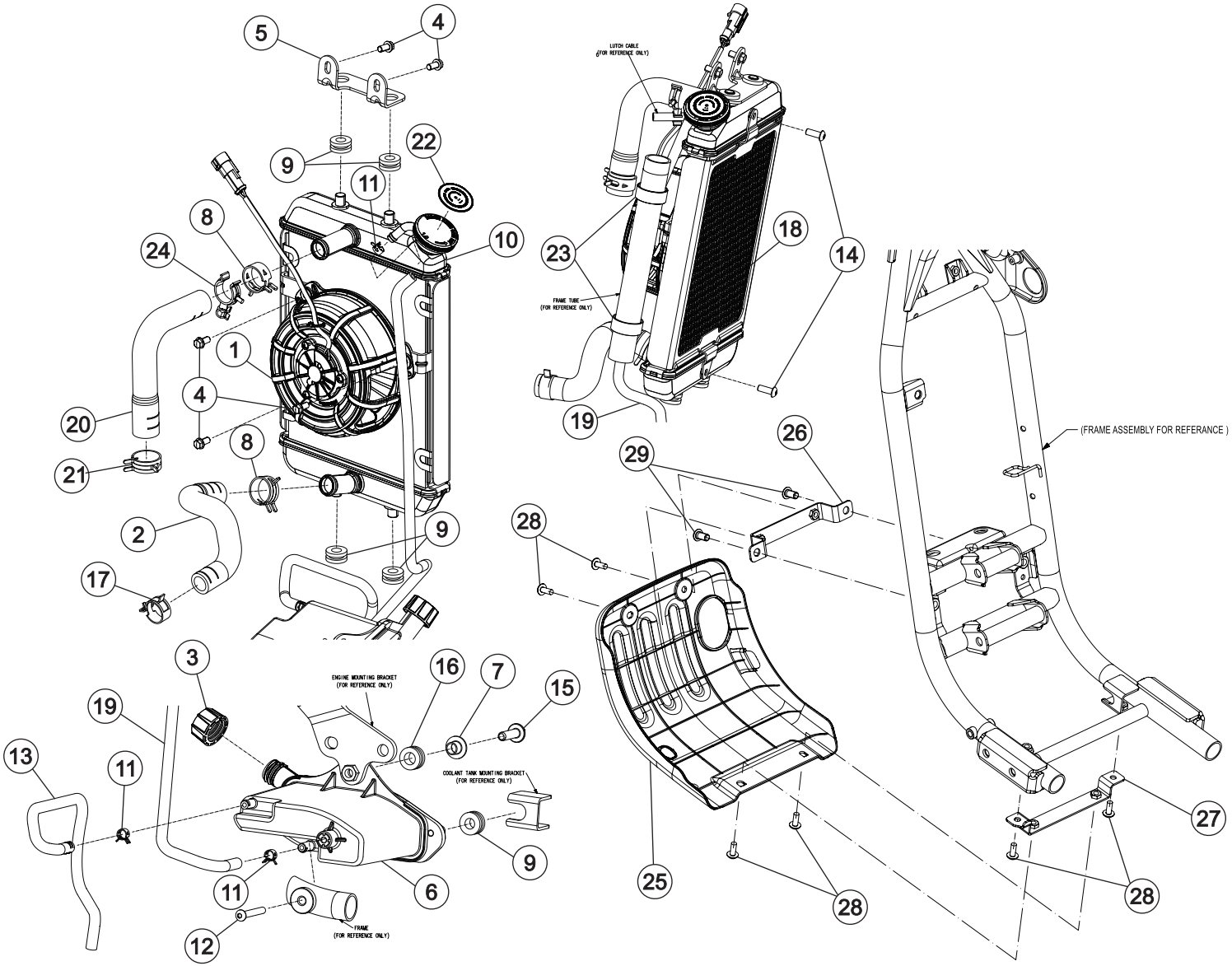
LUTCH CABLE
(FOR REFERENCE ONLY)
FRAME TUBE
(FOR REFERENCE ONLY)
(FRAME ASSEMBLY FOR REFERANCE)
ENGINE MOUNTING BRACKET
(FOR REFERENCE ONLY)
COOLANT TANK MOUNTING BRACKET
(FOR REFERENCE ONLY)
FRAME
(FOR REFERENCE ONLY)

23 RADIATOR

SR. NO.	PART NUMBERS	PART DESCRIPTION	FRT	QTY	REMARKS
1	T0401FKW0020N	RADIATOR FAN	0.5	1	
2	T04000KW0040N	HOSE RADIATOR TO PUMP	0.8	1	
3	T0401DY50050N	CAP COOLANT TANK	0.3	1	
4	SF0202346	SCREW HEX FL M6X1X12X8.8	0.6	5	
5	T04000KW0090E	UPPER BRACKET RADIATOR LOOSE	0.4	1	
6	T0401DY50020N	TANK RECOVERY-COOLING SYSTEM	0.7	1	
7	T13030KM0120N	COLLAR M8 REAR SIDE COVER MTG	0.1	1	
8	T0401DKE0290N	SPRING BAND CLAMP DIA 24	0.8	2	
9	Mh01610001700	GROMMET FOR M6	0.4	5	
10	T0401AJ20050N	RADIATOR SUB ASSEMBLY	0.9	1	
11	T10050KE0100N	SPRING BAND CLAMP DIA 11.5MM (WHITE)	0.2	3	
12	SF0212051	SCREW RDSKT M6X1X45X8.8	0.1	1	
13	T04000Y50020N	BREATHER HOSE	0.7	1	
14	TSF0224080	SOCKET HEAD SCREW M6X16 BLACK (LOCKTITE)	0.2	2	
15	SF0102642	BOLT HEX FL M8X1.25X35X10.9	0.1	1	
16	T13030KM0110N	GROMMET M8 REAR SIDE COVER MTG	0.1	1	
17	SF0705047	CLAMP SPRING BAND 23X12X1.5	0.8	1	
18	T0401AKW0070N	RADIATOR GRILL	0.2	1	
19	T0401DJ20090N	HOSE RADIATOR TO RECOVERY TANK	0.4	1	
20	T04000KW0030N	HOSE THERMOSTAT TO RADIATOR	0.8	1	
21	T0401DKE0300N	SPRING BAND CLAMP DIA 27	0.8	1	
22	T0401AKW0050N	RADIATOR PRESSURE CAP BADGE JAWA	0.1	1	
23	T08000B10420N	RUBBER STRAP 110 MM	0.1	2	
24	1001CAA13420N	CLIP FUEL HOSE	0.1	1	
25	T08000KW0630N	BASH PLATE	0.5	1	
26	T08000KW0800N	BASH PLATE MOUNTING BRACKET	0.4	1	
27	T08000KW0830N	BASH PLATE MOUNITNG BRACKET LOWER	0.4	1	
28	SF0212037	SCREW RDSKT M6X1X12X8.8	0.2	6	
29	SF0212042	SCREW RDSKT M8X1.25X16X8.8	0.2	2	

24 REAR FENDER ASSEMBLY (1/2)

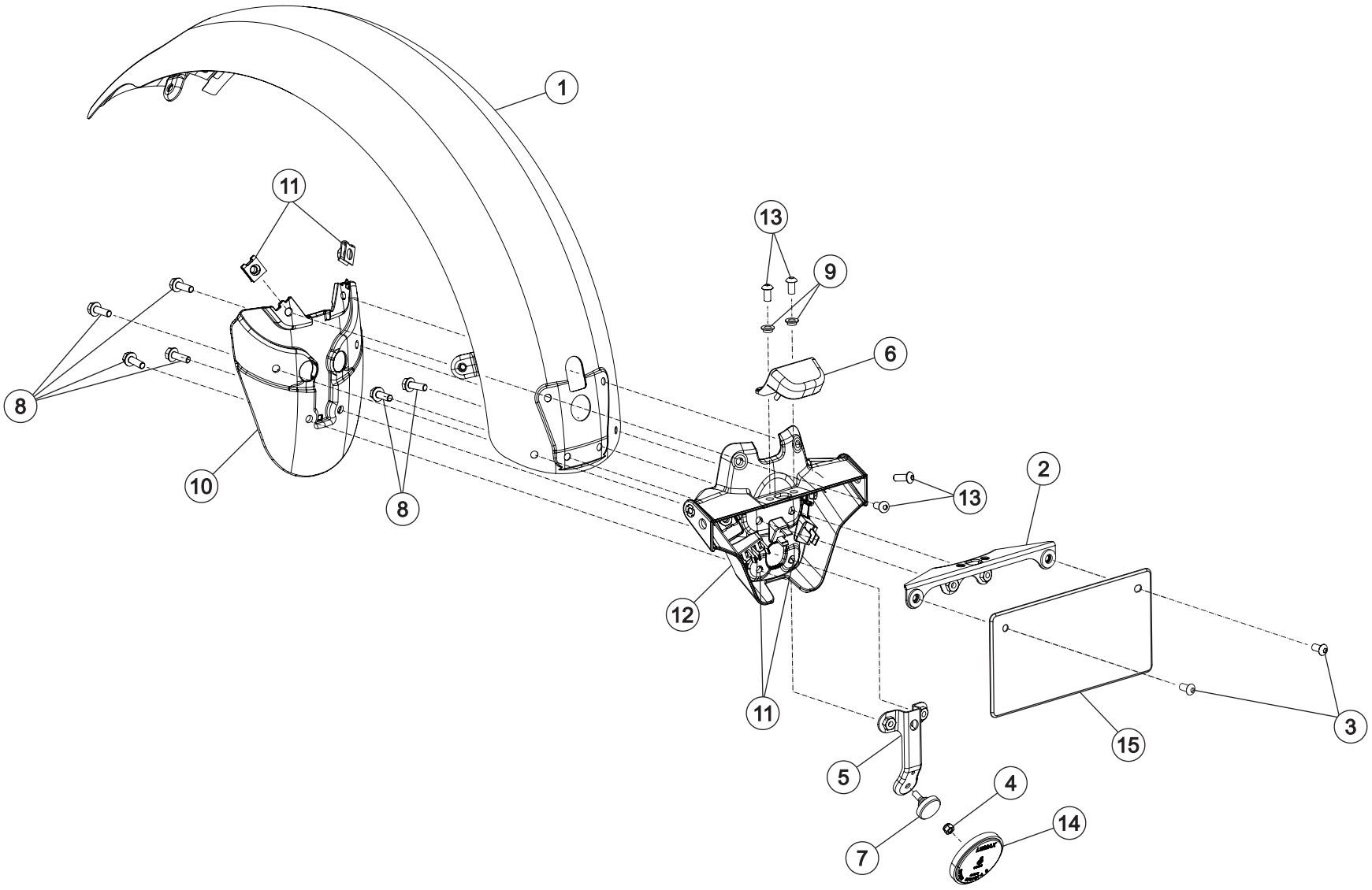

24 REAR FENDER ASSEMBLY (1/2)

SR. NO.	PART NUMBERS	PART DESCRIPTION	FRT	QTY	REMARKS
1	T13070J20140W	REAR FENDER - BLACK GLOSS	0.8	1	
2	T13070J30150N	REAR NUMBER PLATE BRACKET	0.4	1	
3	TSF0212011	BUTTON HEAD SOCKET SCREW M6X16	0.2	2	
4	SF0302157	NUT NYLOC M5X0.8X6.8X6	0.2	1	
5	T13070KW0110W	REFLEX REFLECTOR MOUNTING BKT BLACK GLOSSY	0.4	1	
6	T1501TKW0020N	LICENSE LAMP ASSEMBLY EU-V	0.4	1	
7	MF01240000400	PAD (MAIN STAND)	0.3	1	
8	TSF0102271	FLANGE BOLT M6X18	0.3	6	
9	MH01790003300	SPACER H=6 FOR M6	0.2	2	
10	T13070J30140N	MUD FLAP REAR FENDER	0.3	1	
11	90305-GK8-0001	NUT CLIP 6 MM	0.3	4	
12	T13070J30130N	REAR INDICATOR HOLDER	0.5	1	
13	SF0212048	SCREW RDSKT M6X1X16X8.8	0.4	4	
14	T1501FKW0060N	REAR REFLEX REFLECTOR	0.2	1	
15	T13030KW0010N	COVER REAR NUMBER PLATE BKT	0.2	1	

25 REAR FENDER ASSEMBLY (2/2)

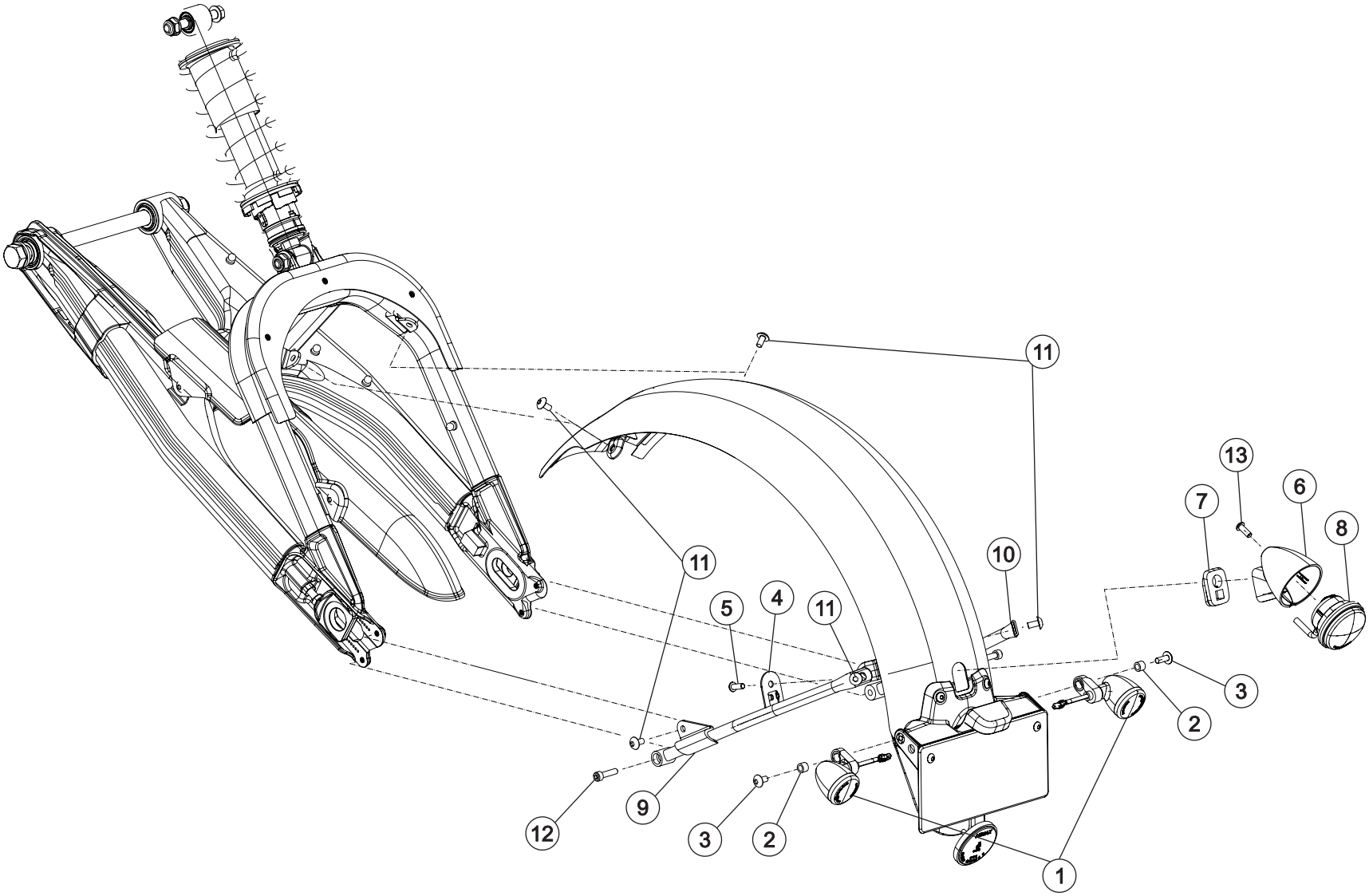

25 REAR FENDER ASSEMBLY (2/2)

SR. NO.	PART NUMBERS	PART DESCRIPTION	FRT	QTY	REMARKS
1	T1501GJ30050N	TURN SIGNAL LAMP	0.3	2	
2	T13000B10220N	COLLAR FOR M6	0.3	2	
3	SF0212048	SCREW RDSKT M6X1X16X8.8	0.3	2	
4	T1307AJ20200N	PLATE TAIL LAMP	0.3	1	
5	TSF0224080	SOCKET HEAD SCREW M6X16 BLACK (LOCKTITE)	0.2	1	
6	T1307AJ20070W	COVER TAIL LAMP CLASSIC - BLACK GLOSS	0.4	1	
7	T13070J20060N	GROMMET TAIL LAMP	0.2	1	
8	T1501EJ20040N	TAIL LAMP	0.3	1	
9	T13070J30100N	STAY REAR FENDER LH	0.3	1	
10	T13070J30110N	STAY REAR FENDER RH	0.3	1	
11	SF0212037	SCREW RDSKT M6X1X12X8.8	0.4	6	
12	SF0224177	SCREW SOCKET M6X1X25X8.8	0.2	2	
13	TSF0212011	BUTTON HEAD SOCKET SCREW M6X16	0.1	1	

26 REAR WHEEL ASSEMBLY

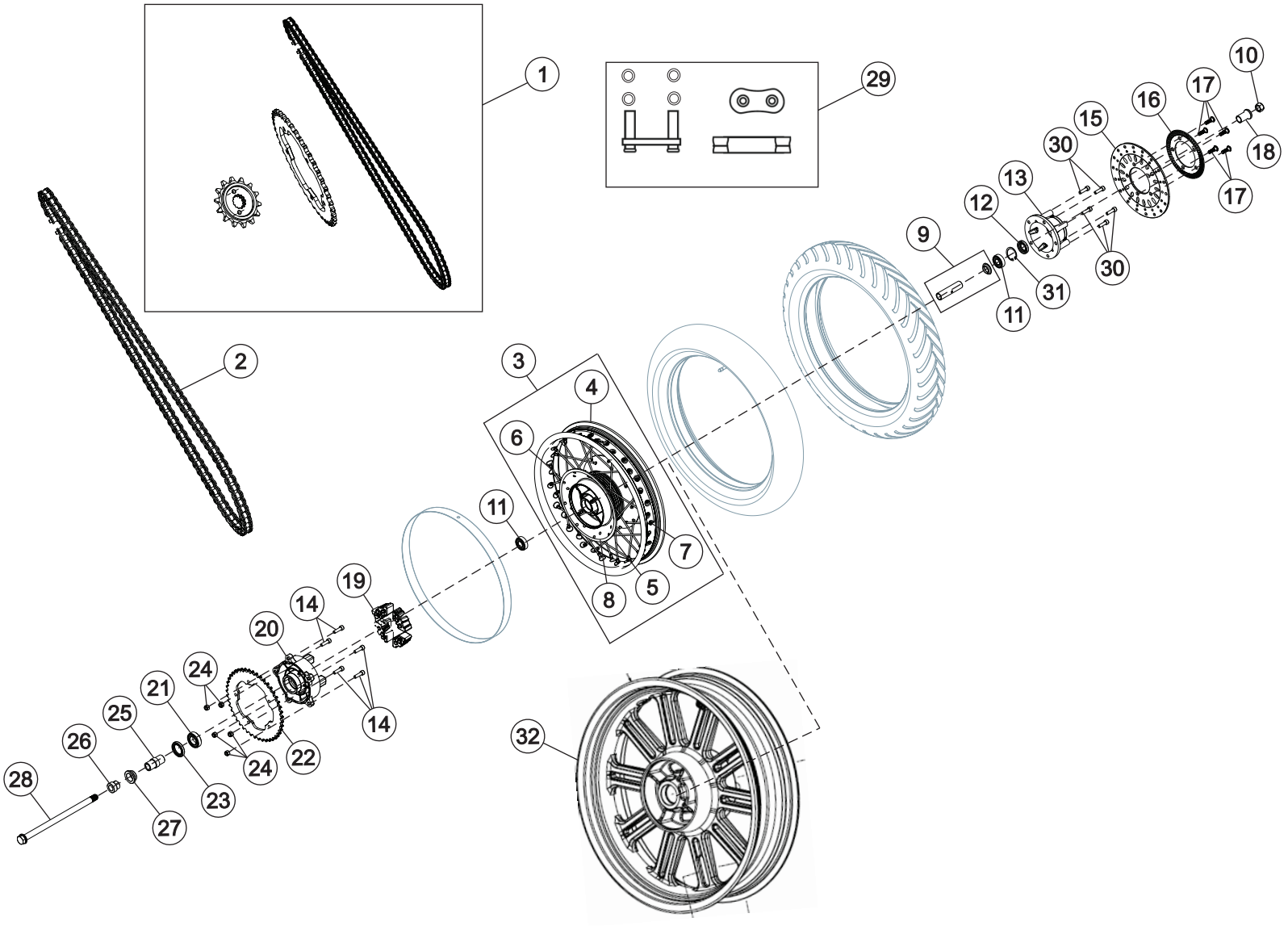

26 REAR WHEEL ASSEMBLY

SR. NO.	PART NUMBERS	PART DESCRIPTION	FRT	QTY	REMARKS
1	T0215GJ30010N	KIT DRIVE CHAIN SPROCKET	1.6	1	
2	T14080J30010N	CHAIN, FINAL DRIVE - 114 LINKS	1.2	1	
3	T12010J30010N	RIM ASSEMBLY, REAR	0.9	1	
4	T1201KB10010N	ALLOY RIM, REAR SPOKE WHEEL (MT4.25x17)	2.0	1	
5	T1201KJ30010N	INNER SPOKE, REAR	2.0	18	
6	T1201KJ30020N	OUTER SPOKE, REAR	2.0	18	
7	T0601JKW0030D	SPOKE NIPPLE (YELLOW)	2.0	36	
8	T1201HKW0020E	REAR WHEEL HUB FOR DISC, MACHINING	2.0	1	
9	T1201CKW0050N	SPACER ASSY INNER, REAR WHEEL	0.7	1	
10	TSF0318003	SELF LOCK NUT M16	0.2	1	
11	T0601DKW0021N	WHEEL BEARING 6203 (17x40x12)	1.0	2	
12	T0601EKW0021N	FRONT DUST SEAL (A22x40x7)	0.6	1	
13	T1201HKW0030E	COUPLER FOR REAR HUB & DISC, MACHINING	0.6	1	
14	SP0308023	SOCKET HEAD SCREW M8X28	0.2	5	
15	T2501GKW0010N	REAR DISC (RH, D=240)	0.8	1	
16	T0602LKE0010N	TONER WHEEL FRONT	0.6	1	
17	SF0200097	SCREW SPECIAL M8X1.25X28XA2-70	0.6	5	
18	T1201CKW0060N	SPACER REAR WHEEL (RH SIDE) REAR DISC	0.3	1	
19	MH01270000500	CUSH DRIVE	0.8	4	
20	T12010KW0040E	CUSH DRIVE HOUSING, MACHINED	0.8	1	
21	T1201DKW0031N	CUSH DRIVE HOUSING BEARING 6005(25X47X12)	0.8	1	
22	T1201MKW0010N	CHAIN SPROCKET (REAR 45T)	0.8	1	
23	T1201EKW0021N	REAR LH DUST SEAL A31x47x7	0.6	1	
24	MH01680001700	SELF-TAPPING NUT FOR M8 (WHITE)	0.8	5	
25	T1201CKW0080N	SPACER CUSH DRIVE HOUSING RH	0.6	1	
26	T1201CKW0070N	SPACER CUSH DRIVE HOUSING LH	0.3	1	
27	T1201CKW0020N	SPACER REAR WHEEL (LH SIDE)	0.4	1	
28	SF0100083	BOLT SPECIAL M16X1.5X305X10.9	0.3	1	
29	T14000KE0180N	CHAIN LINK KIT	0.6	1	
30	SP0308023	SOCKET HEAD SCREW M8X28	0.4	5	

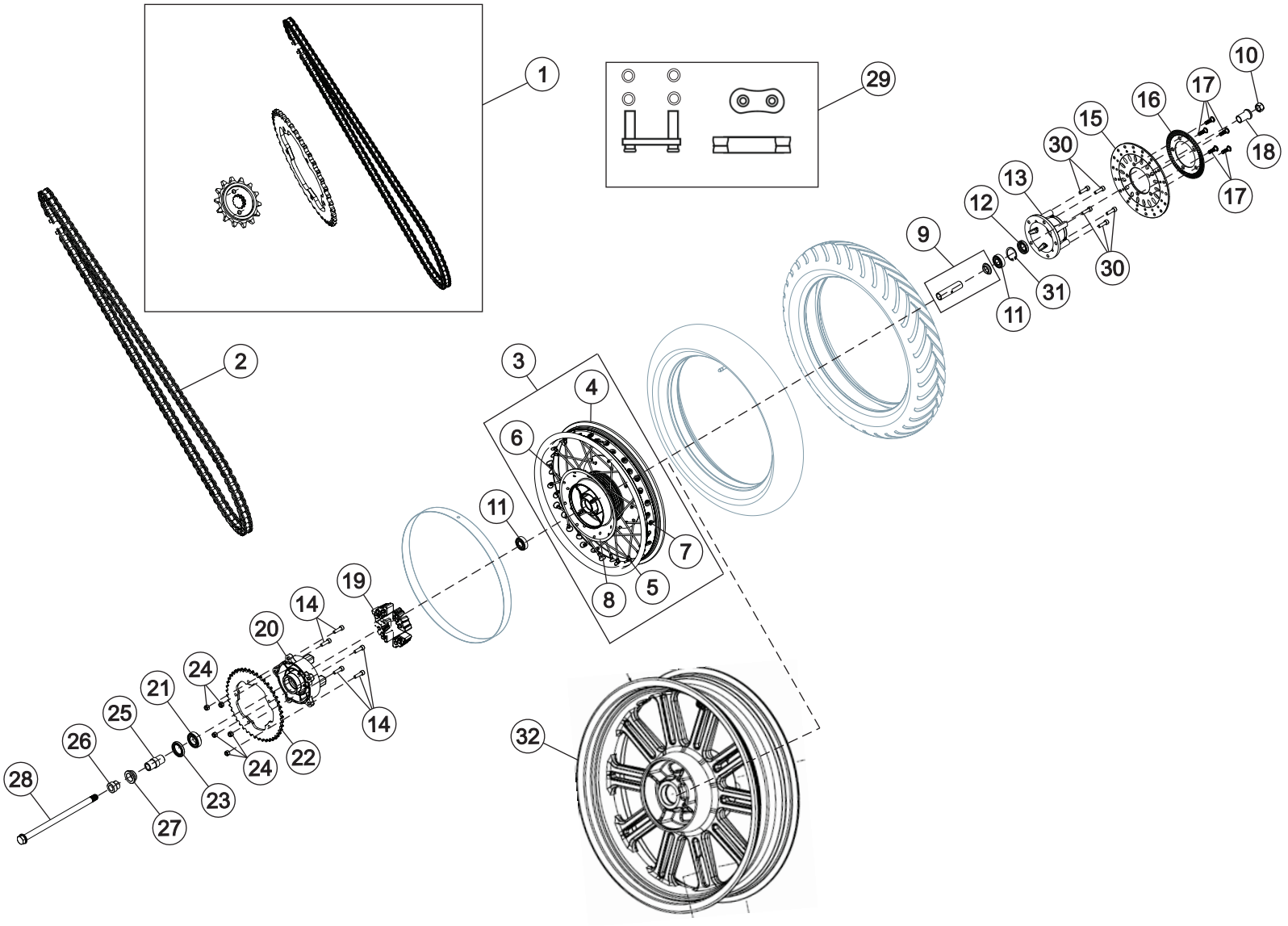
1
29
10
16
17
15
18
30
13
12
17
9
31
30
11
2
3
4
6
11
7
8
5
19
14
20
24
21
25
26
28
27
23
24
22
14
32

26 REAR WHEEL ASSEMBLY

SR. NO.	PART NUMBERS	PART DESCRIPTION	FRT	QTY	REMARKS
31	SF0602007	CIRCLIP INT - LUG 40X1.75XPH	0.5	1	
32	T1201AJ20010N	ALLOY WHEEL REAR (MT 4.25X17)	2.0	1	

27 SEAT ASSEMBLY

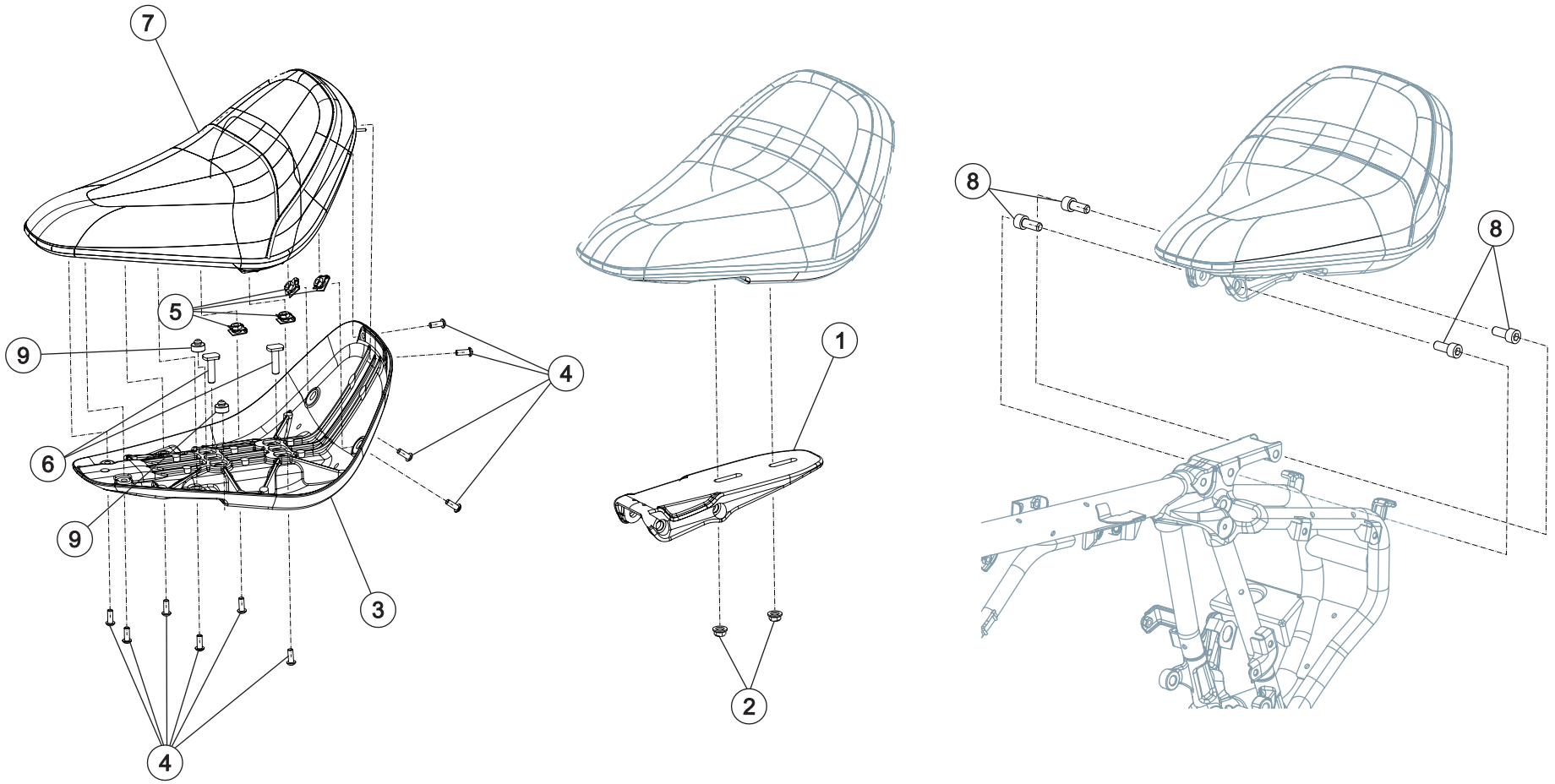

27 SEAT ASSEMBLY

SR. NO.	PART NUMBERS	PART DESCRIPTION	FRT	QTY	REMARKS
1	T09000J30040N	SEAT MOUNTING BRACKET	0.6	1	
2	TSF0318005	SELF LOCK NUT M8	0.4	2	
3	T0901AJ30030N	SEAT PAN	0.4	1	
4	TSF0224080	SOCKET HEAD SCREW M6X16 BLACK (LOCKTITE)	0.5	10	
5	90305-GK8-0001	CLIP NUT 6MM (BLACK)	0.5	4	
6	T09000J30030N	SEAT MOUNTING STUD	0.5	2	
7	T09010J30030N	SEAT ASSEMBLY	0.5	1	
8	SF0224168	SCREW SOCKET M10X1.5X25X8.8	0.5	4	
9	T0901EKE1910N	SEAT DAMPER 9 MM	0.4	2	

28 SILENCER ASSEMBLY

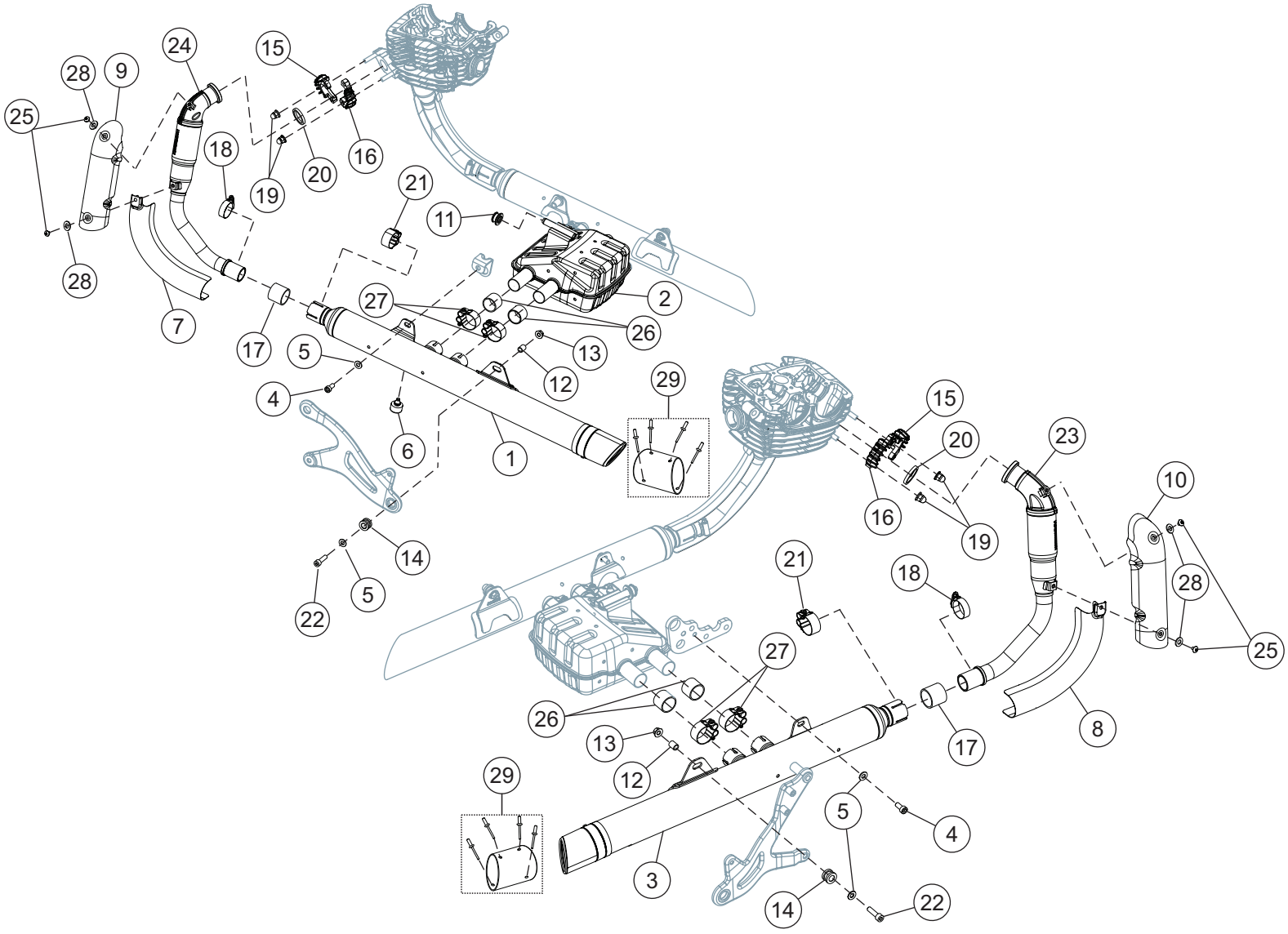

28 SILENCER ASSEMBLY

SR. NO.	PART NUMBERS	PART DESCRIPTION	FRT	QTY	REMARKS
1	T0302AJ30700N	BODY MUFFLER ASSEMBLY LH	1.0	1	
2	T0302AJ30300N	EXPANSION CHAMBER ASSY	1.0	1	
3	T0302AJ30710N	BODY MUFFLER ASSEMBLY RH	1.0	1	
4	SP0224002	SOCKET HEAD SCREW M8X18 (BLACK)	0.1	2	
5	SF0401061	WASHER PLAIN M8X22X2.3	0.1	4	
6	T0901HAE1900N	RUBBER STOPPER FOR MAIN STAND	0.2	1	
7	T0302BJ30020N	STYLE SHIELD BOTTOM LH	0.4	1	
8	T0302BJ30010N	STYLE SHIELD BOTTOM RH	0.4	1	
9	T03000KW0540E	STYLE SHIELD TOP LH	0.4	1	
10	T03000KW0550E	STYLE SHIELD TOP RH	0.4	1	
11	T0302CJ30030N	GROMMET GUIDE SUPPORT	1.0	1	
12	T0302CKU0030N	SLEEVE SILENCER MOUNTING REAR (M102)	0.2	2	
13	SF0303059	NUT HEX FL PR M8X1.25X8X8	0.2	2	
14	T0302CKU0020N	GROMMET SILENCER MOUNTING REAR (M102)	0.2	2	
15	T0304CKW0070T	EXHAUST FLANGE BOTTOM	0.2	2	
16	T0304CKW0060T	EXHAUST FLANGE TOP	0.2	2	
17	T0302BKE0450N	GASKET	1.0	2	
18	SF0703002	HOSE CLIP W M35X0.7X12.7XSS PL	0.8	2	
19	SF0300075	NUT SPECIAL M8X1.25X17X8	0.2	4	
20	T0304BKW0010N	EXHAUST GASKET	0.5	2	
21	T0302CKW0250N	EXHAUST CLAMP M40	0.5	2	
22	SF0224176	SCREW SOCKET M8X1.25X30X10.9	0.1	2	
23	T0302AJ30640N	HEADER PIPE ASSEMBLY RH	1.0	1	
24	T0302AJ30630N	HEADER PIPE ASSEMBLY LH	1.0	1	
25	SF0212035	SCREW RDSKT M5X0.8X8X8.8	0.4	4	
26	T0304BKW0020N	GRAPHITE GASKET	0.7	4	
27	T0302CJ30040N	EXHAUST CLAMP M36	0.7	4	
28	SF0401445	WASHER PLAIN M5X10X1	0.4	4	
29	T03000J30090N	KIT EXHAUST END CAP WITH RIVET	0.4	2	

29 SILENCER ASSEMBLY - OBD-II PHASE-2_EURO-5+

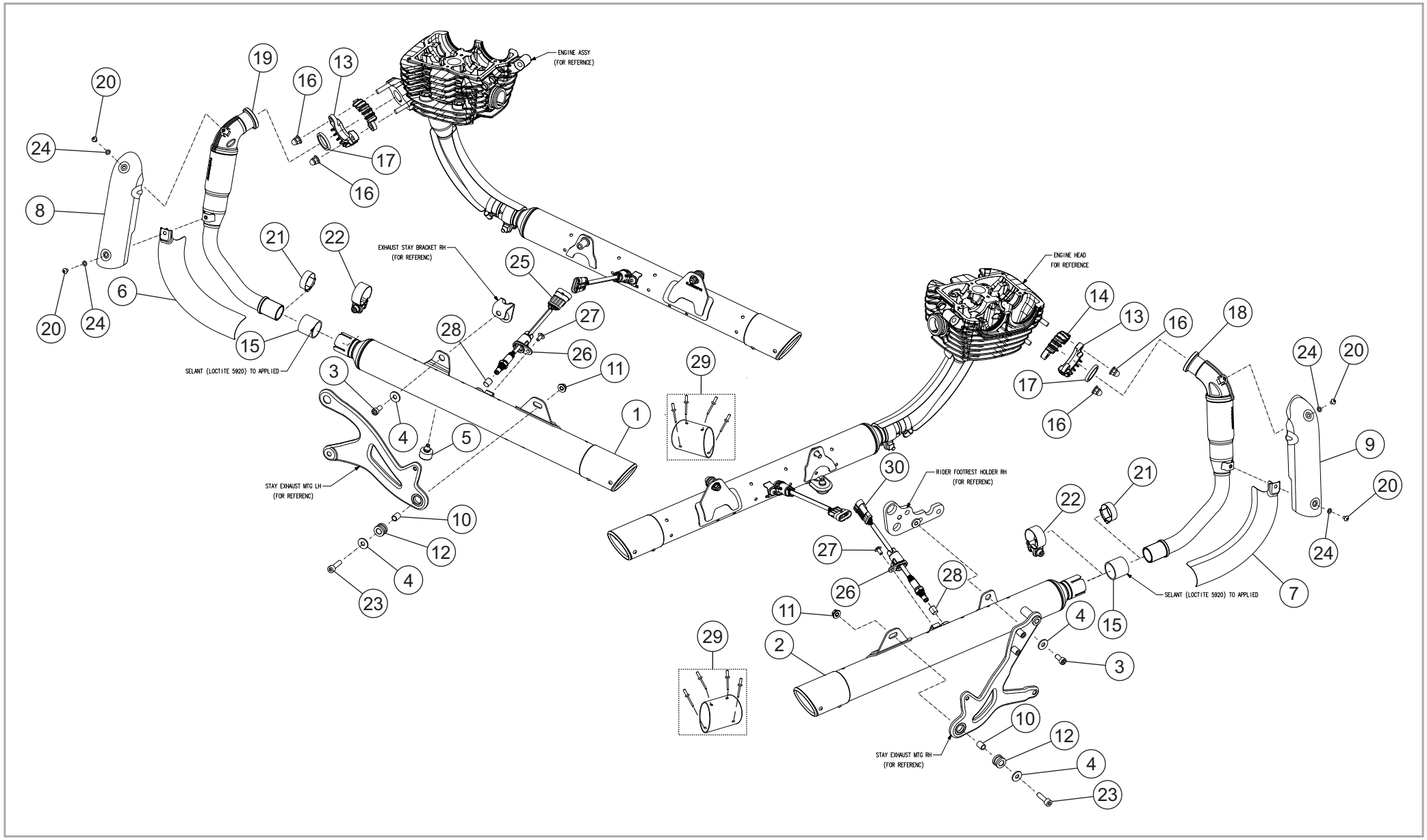

29 SILENCER ASSEMBLY - OBD-II PHASE-2_EURO-5+

SR. NO.	PART NUMBERS	PART DESCRIPTION	FRT	QTY	REMARKS
1	T0302AJ30920N	BODY MUFFLER ASSEMBLY LH	1.0	1	
2	T0302AJ30930N	BODY MUFFLER ASSEMBLY RH	1.0	1	
3	SP0224002	SOCKET HEAD SCREW M8X18 (BLACK)	0.1	2	
4	SF0401061	WASHER PLAIN M8X22X2.3	0.1	4	
5	T0901HAE1900N	MAIN STAND STOPPER RUBBER	0.2	1	
6	T0302BJ30020N	STYLE SHIELD BOTTOM LH	0.4	1	
7	T0302BJ30010N	STYLE SHIELD BOTTOM RH	0.4	1	
8	T03000KW0540E	STYLE SHIELD TOP LH (BLACK)	0.4	1	
9	T03000KW0550E	STYLE SHIELD TOP RH (BLACK)	0.4	1	
10	T0302CKU0030N	SLEEVE SILENCER MTG REAR (M102)	0.2	2	
11	SF0303059	NUT HEX FL PR M8X1.25X8X8	0.2	2	
12	T0302CKU0020N	GROMMET SILENCER MTG. REAR(M102)	0.2	2	
13	T0304CKW0070T	EXHAUST FLANGE BOTTOM (T)	0.2	2	
14	T0304CKW0060T	EXHAUST FLANGE TOP (T)	0.2	2	
15	T0302BKE0450N	GASKET	1.0	2	
16	SF0300075	NUT SPECIAL M8X1.25X17X8	0.2	4	
17	T0304BKW0010N	EXHAUST GASKET	0.5	2	
18	T0302AJ30640N	HEADER PIPE ASSEMBLY RH	1.0	1	
19	T0302AJ30630N	HEADER PIPE ASSEMBLY LH	1.0	1	
20	SF0212035	SCREW RDSKT M5X0.8X8X8.8	0.4	4	
21	SF0703002	HOSE CLIP W M35X0.7X12.7XSS PL	0.8	2	
22	T0302CKW0250N	EXHAUST CLAMP M40	0.5	2	
23	SF0224176	SCREW SOCKET M8X1.25X28X10.9	0.1	2	
24	SF0401445	WASHER PLAIN M5X10X1	0.4	4	
25	T15000J10040N	LAMBDA SENSOR DOWN STREAM	0.2	1	
26	T0302AJ10170E	COVER LAMBDA SENSOR (BLACK)	0.2	2	
27	SF0212023	SCREW RDSKT M6X1X12XA2-70	0.2	2	
28	SF1104035	PLUG TPR SK MC12X1.25 ST SL	0.1	2	
29	T03000J30090N	KIT EXHAUST END CAP WITH RIVET	0.4	2	
30	T15000J10010N	LAMBDA SENSOR DOWN STREAM RH	0.2	1	

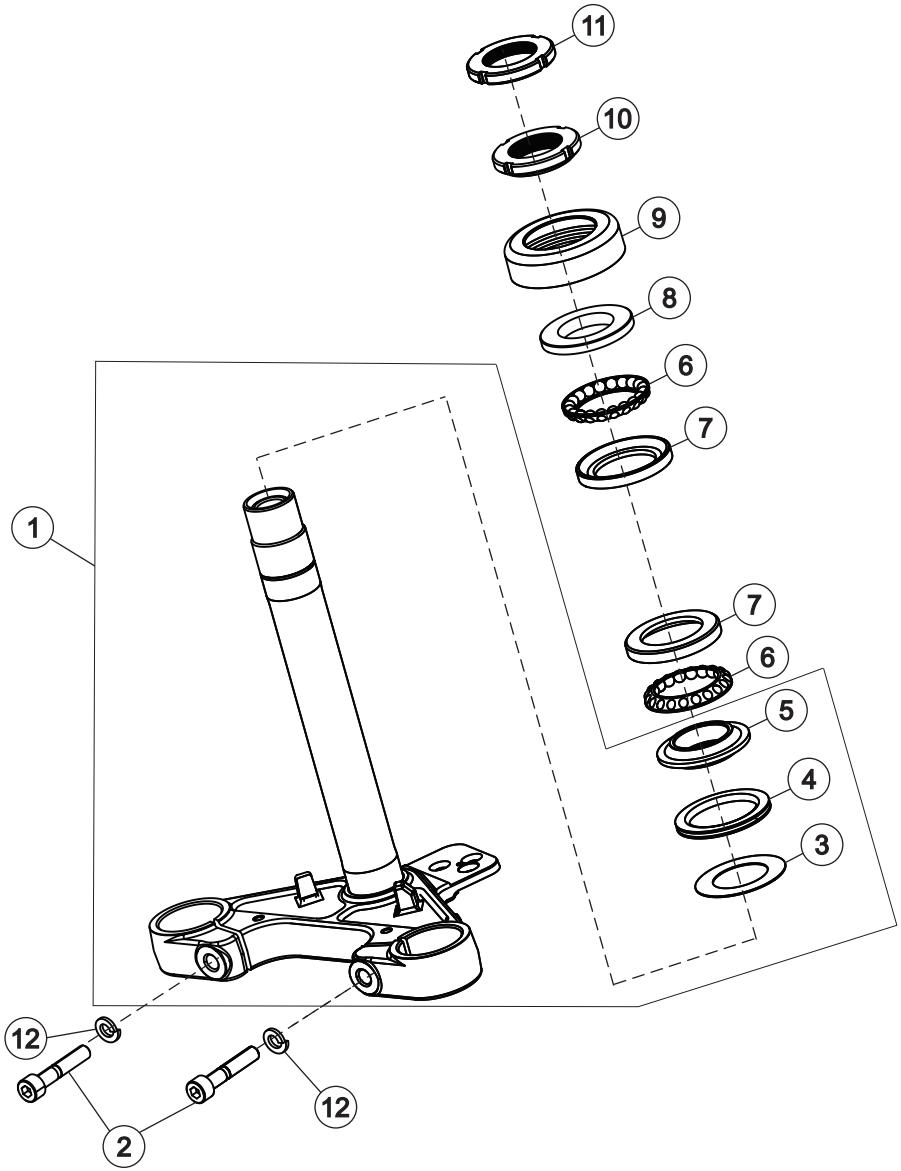
11
10
9
8
6
7
1
7
6
5
4
3
12
2
12

30 STEERING

SR. NO.	PART NUMBERS	PART DESCRIPTION	FRT	QTY	REMARKS
1	T05000KW0040N	UNDER BRACKET ASSEMBLY	1.0	1	
2	SF0105028	SCREW SOCKET M8X1 25X48X10.9	0.4	2	
3	T0505BKW0010N	STEERING DUST SEAL	2.0	1	
4	T0505BKW0020N	STEERING DUST SEAL WASHER	2.0	1	
5	T05000KW0070N	BOTTOM INNER BALL RACE	2.0	1	
6	T0505NKW0010N	STEERING BALL (DIA 6.35) WITH CAGE	2.0	2	
7	T05010KW0020N	OUTER BALL RACE	2.0	2	
8	T05000KW0090N	TOP INNER BALL RACE	2.0	1	
9	T05010KW0010N	DUST CAP TOP STEERING BEARING	2.0	1	
10	T0505CY50010E	STEERING NUT	1.0	1	
11	T0505CY50020E	STEERING LOCK NUT	1.0	1	
12	SP3908001	SPRING WASHER (M8)	0.3	2	

31 FRONT FORK ASSEMBLY

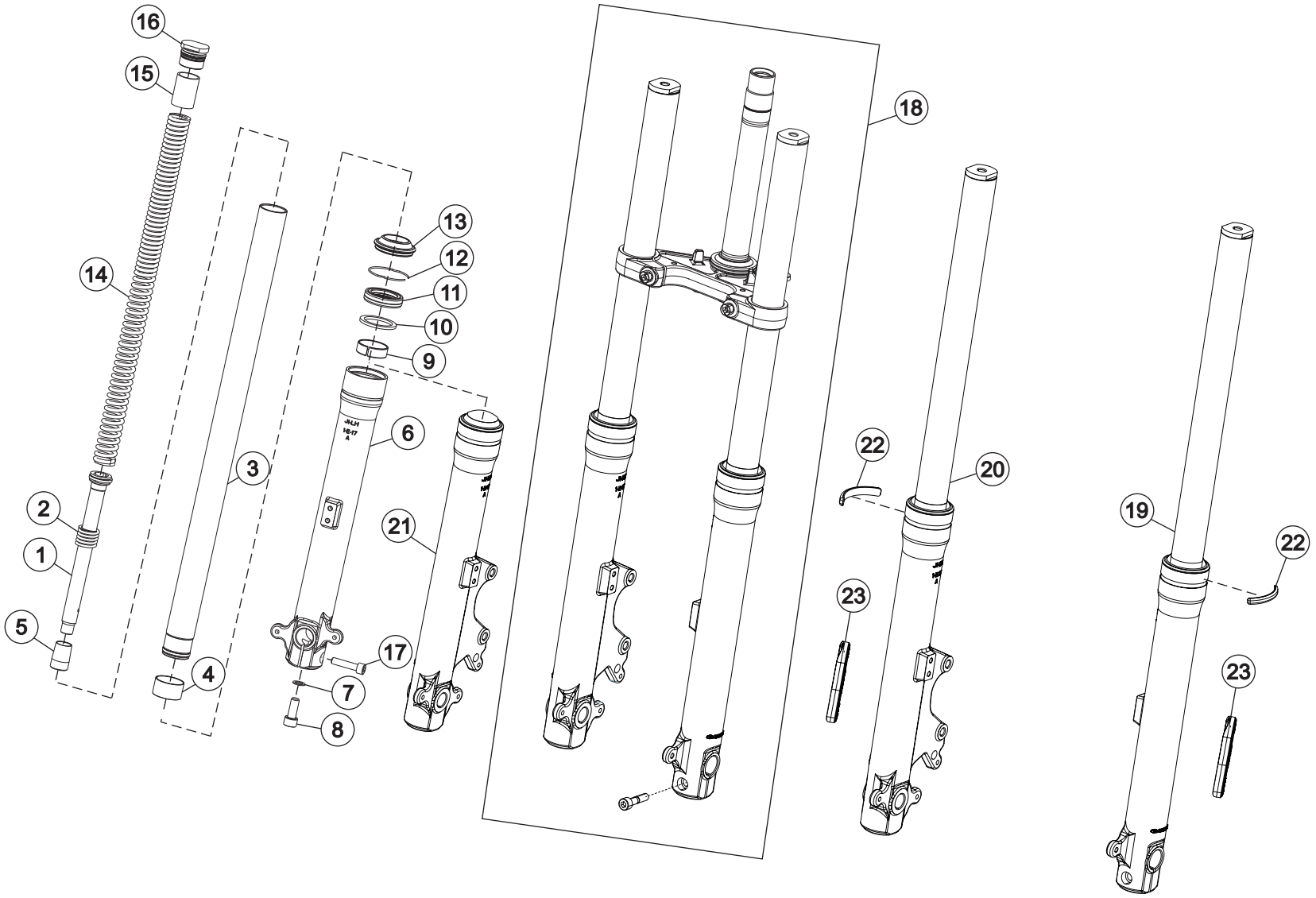

31 FRONT FORK ASSEMBLY

SR. NO.	PART NUMBERS	PART DESCRIPTION	FRT	QTY	REMARKS
1	T05010J30030N	PISTON (PISTON+PISTON RING)	1.3	1	
2	T05010J30040N	FRONT FORK REBOUND SPRING	1.3	1	
3	T05010KW0090N	INNER TUBE ASSEMBLY	1.3	1	
4	T05010KW0110N	SLIDE BUSH	1.3	1	
5	T05010KW0120N	SPINDLE TAPER	1.3	1	
6	T05010J30070N	OUTER TUBE LH	1.3	1	
7	T05010KW0140N	GASKET	1.3	1	
8	T05010KW0150N	BOLT M10X1	1.3	1	
9	T05010KW0160N	GUIDE BUSH	1.3	1	
10	T05010KW0170N	DU BUSH WASHER	1.3	1	
11	T05010KW0180N	OIL SEAL	1.3	1	
12	T05010KW0190N	CIRCLIP (SANP-RING)	1.3	1	
13	T05010KW0200N	DUST SEAL	1.0	1	
14	T05000J30010N	SPRING-1	0.8	1	
15	T05010J30060N	SPACER	0.8	1	
16	T05010KW0250N	BOLT CAP ASSLY	0.6	1	
17	T05010KW0260N	SOCKET HEAD BOLT(M8X1.25X35)	0.2	1	
18	T05010J30090N	FRONT FORK ASSY	1.5	1	
19	T05030J30020N	FORK LEG ASSY LH	1.3	1	
20	T05040J30020N	FORK LEG ASSY RH	1.3	1	
21	T05010J30080N	OUTER TUBE RH	1.3	1	
22	T13000KW0170N	BEADING FRONT FORK_PUDOM	0.3	2	
23	T1501FB10020N	SIDE REFLEX REFLECTOR	0.2	2	

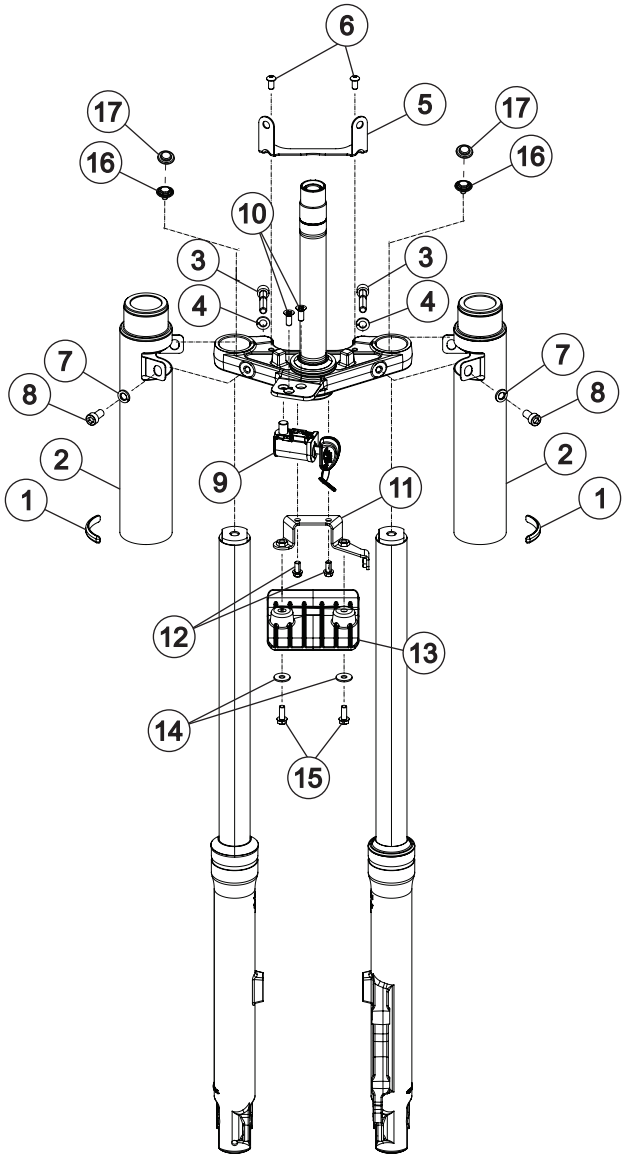
6
17
16
5
17
16
10
3
4
3
4
7
8
7
8
2
1
9
11
2
1
12
13
14
15

32 FRONT FORK MOUNTINGS

SR. NO.	PART NUMBERS	PART DESCRIPTION	FRT	QTY	REMARKS
1	T13000KW0170N	BEADING FRONT FORK_PUDOM	0.3	2	
2	T05010KW0050E	FRONT FORK COVER TUBE ASSY	1.0	2	
3	SF0105028	SCREW SOCKET M8X1 25X48X10.9	0.2	2	
4	SF0402030	WASHER SPRING L M8x14.8x2xZG	0.2	2	
5	T13160KW0070N	BRACKET INDICATOR MOUNTING FRONT	0.5	1	
6	TSF0214019	SCREW M6 X 25	0.4	2	
7	SF0401479	WASHER PLAIN M8X14X2 (BLACK)	0.2	2	
8	SF0212025	SCREW RDSKT M8X1.25X16XA2-70	0.2	2	
9	T08000KW0230N	STEERING LOCK MINDA	0.4	1	
10	SF0212037	SCREW RDSKT M6X1X12X8.8	0.3	2	
11	T05000KW0270N	AIR DEFLECTOR MOUNTING BRACKET	0.3	1	
12	95701-06012-00	BOLT FL.6 X 12	0.3	2	
13	T13000KW0060N	AIR DEFLECTOR RR MNTG	0.3	1	
14	SF0401090	WASHER PLAIN M6X18X1.6	0.3	2	
15	95701-06016-00	BOLT FLANGE 6X16	0.3	2	
16	T05000KW0260N	FORK TOP BOLT M10X1.5	0.2	2	
17	T07000KW0040N	CAP FORK	0.2	2	

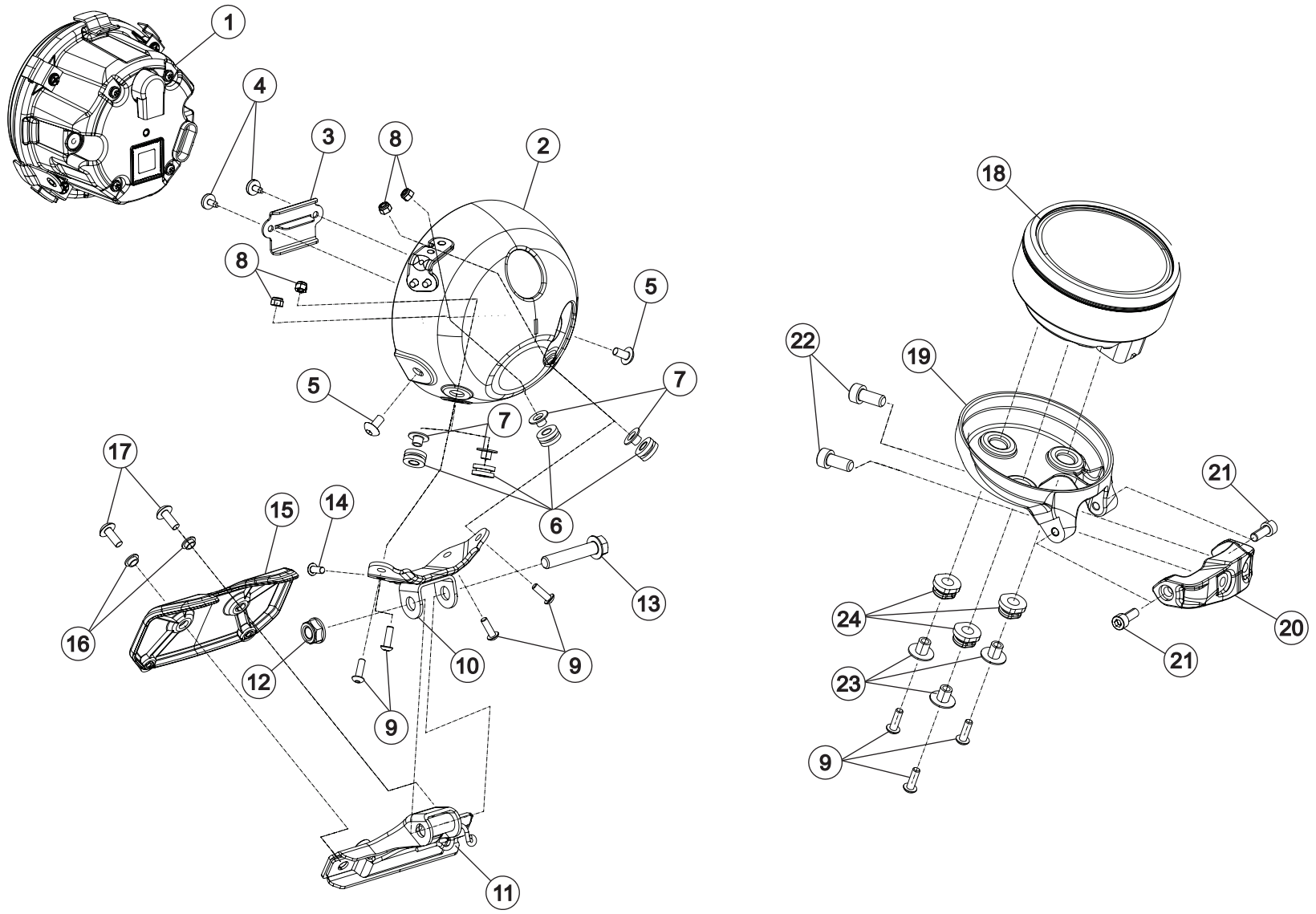
1
4
3
8
2
8
5
5
7
7
6
17
15
14
13
16
12
10
9
9
11
18
22
19
21
24
20
23
21
9

33 FAIRING ASSEMBLY (1/2)

SR. NO.	PART NUMBERS	PART DESCRIPTION	FRT	QTY	REMARKS
1	T1501DJ20070N	HEADLAMP	0.4	1	
2	T13190J20020W	HEADLAMP COVER	0.3	1	
3	T13160J20140N	HEADLAMP COVER CONNECTOR CAP	0.5	1	
4	SF0216001	SCREW TPPA CR ST4.2X1.4X9.5 C WH	0.5	2	
5	SF0212037	SCREW RDSKT M6X1X12X8.8	0.2	2	
6	T13160KW0180N	GROMMET FOR M5	0.4	4	
7	T13160KW0190N	COLLAR FOR M5	0.4	4	
8	SF0302015	NYLOC NUT M5	0.4	4	
9	SF0212036	SCREW RDSKT M5X0.8X16X8.8	0.7	7	
10	T13190J20030N	HEADLAMP COVER MOUNTING BRACKET	0.5	1	
11	T13190J30020N	BRACKET HEADLAMP MOUNTING	0.5	1	
12	TSF0318009	FLANGE U NUT M10X1.5	0.3	1	
13	TSF0102302	FLANGE BOLT M10 X 50	0.3	1	
14	SF0212035	SCREW RDSKT M5X0.8X8X8.8	0.2	1	
15	T13190J30030E	UNDER COVER HEAD LAMP - SATIN BLACK	0.2	1	
16	MH01790003300	SPACER H=4 FOR M6	0.2	2	
17	TSF0212011	BUTTON HEAD SOCKET SCREW M6X16	0.2	2	
18	T1501HY40010N	SPEEDOMETER Y401	0.8	1	
19	T13180J20010N	SPEEDOMETER MTG BRACKET	0.8	1	
20	T13160J30020N	BRACKET SPEEDOMETER MOUNTING	0.8	1	
21	SF0224110	SCREW SOCKET M6X1X20X8.8	0.4	2	
22	SP0224002	SOCKET HEAD SCREW M8X18 (BLACK)	0.4	2	
23	T08020B10020N	COLLAR FOR M5	0.8	3	
24	T13180AE0030E	GROMMET FOR M6	0.8	3	

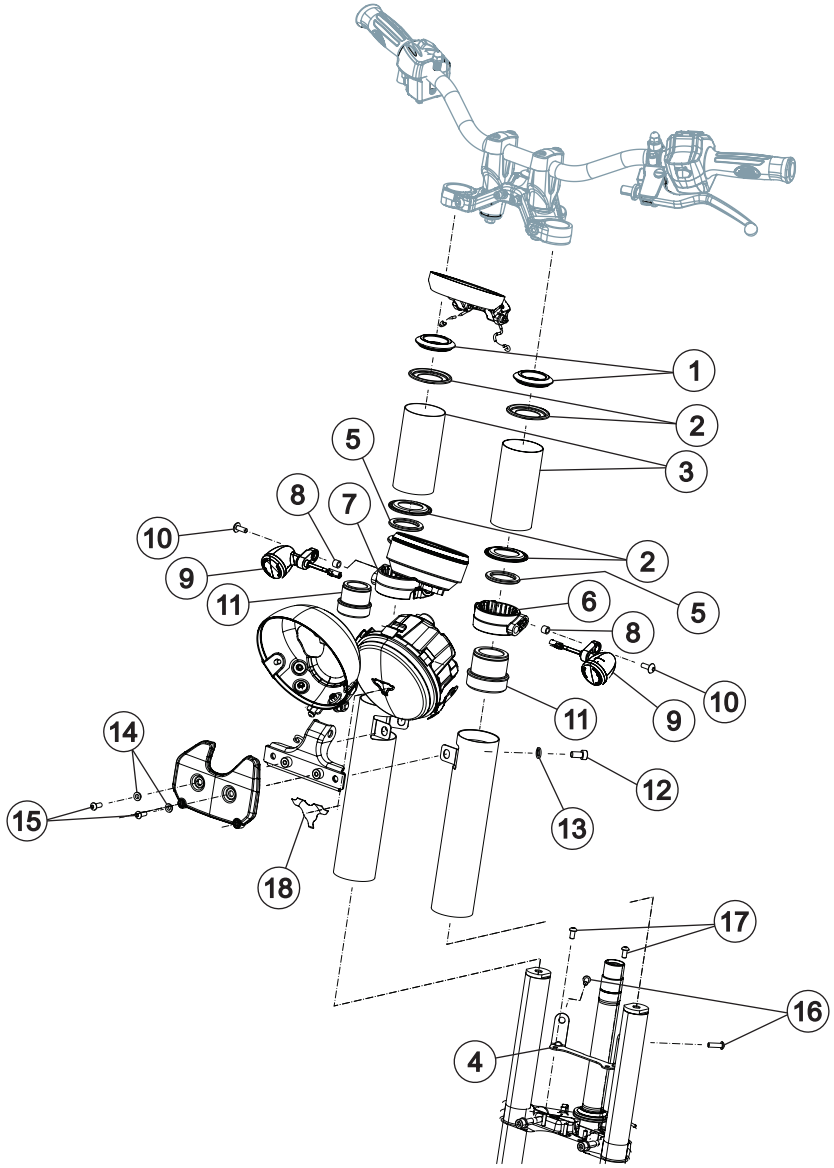
1
2
3
5
8
7
10
9
11
2
5
6
8
10
9
11
14
15
18
12
13
17
16
4

34 FAIRING ASSEMBLY (2/2)

SR. NO.	PART NUMBERS	PART DESCRIPTION	FRT	QTY	REMARKS
1	T13160KW0090N	DAMPER HEAD LAMP STAY	0.4	2	
2	T08020KW0060N	GUIDE RING	0.5	4	
3	T13160J30040W	COVER TUBE TOP - BLACK GLOSS	0.5	2	
4	T13160KW0070N	BRACKET INDICATOR MOUNTING FRONT	0.3	1	
5	T13160KW0130N	DAMPER HEAD LAMP STAY LOWER	0.2	2	
6	T13000J30020W	FRONT INDICATOR MOUNTING SPACER LH - BLACK GLOSS	0.2	1	
7	T13000J30030W	FRONT INDICATOR MOUNTING SPACER RH - BLACK GLOSS	0.2	1	
8	T13000B10220N	COLLAR FOR M6	0.2	2	
9	T1501GJ30050N	TURN SIGNAL LAMP J302	0.2	2	
10	SF0212048	SCREW RDSKT M6X1X16X8.8	0.2	2	
11	T05010KW0040N	GUIDE, FRONT FORK COVER TUBE	0.4	2	
12	SF0212042	SCREW RDSKT M8X1.25X15X8.8	0.2	2	
13	SF0401127	WASHER PLAIN M8X16X1.5	0.2	2	
14	MH01790003300	SPACER H=4 FOR M6	0.2	2	
15	TSF0212011	BUTTON HEAD SOCKET SCREW M6X16	0.2	2	
16	SF0212047	SCREW RDSKT M6X1X28X8.8	0.5	2	
17	SP0706018	SCREW TBEI M6X12 UNI 7380	0.5	2	
18	T13200J30440N	Y TAPE HEADLAMP BADGE	0.2	1	

35 SIDE PANEL LH & RH ASSY / ECU & RELAY / FUSEBOX / LOCK SET KIT

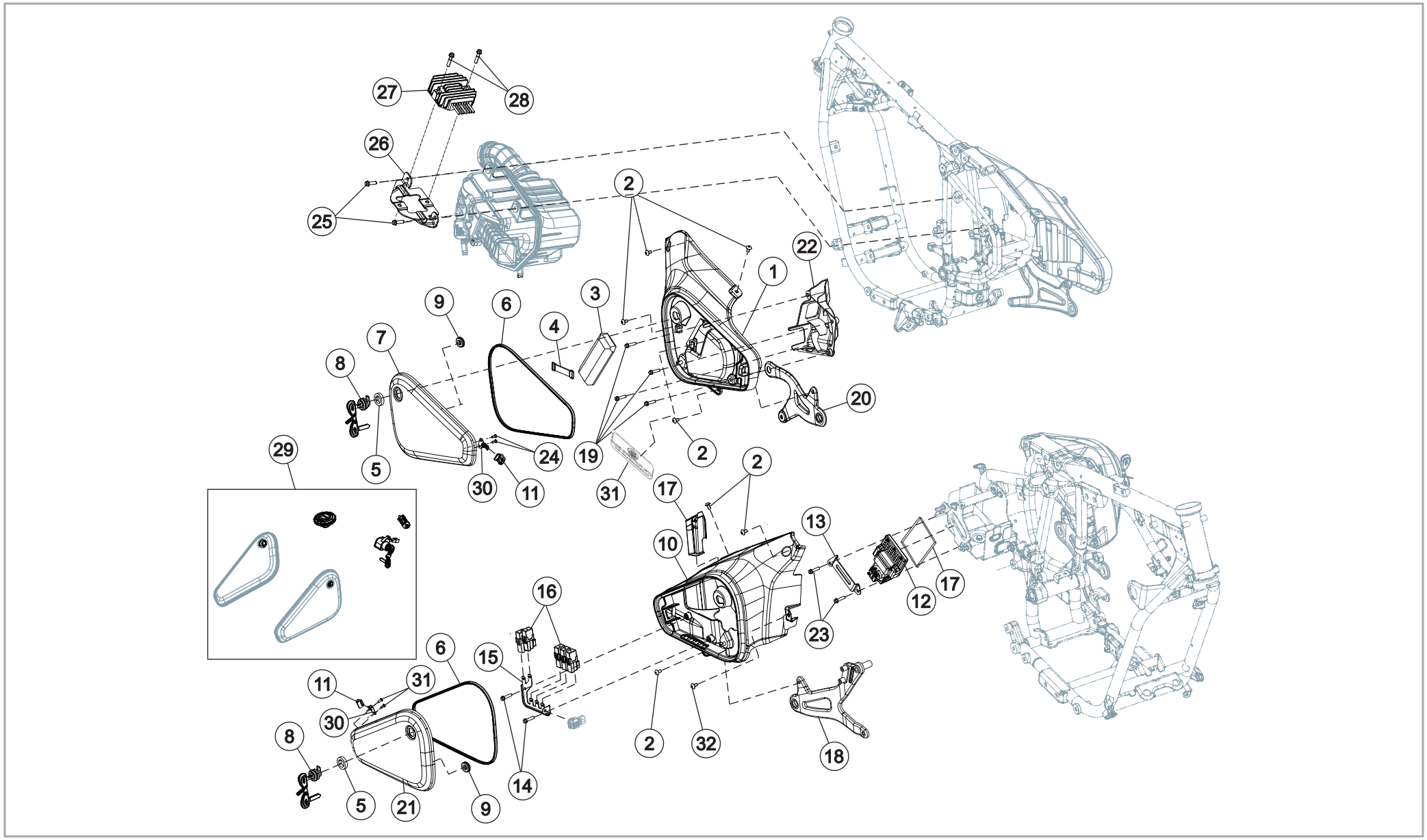

35 SIDE PANEL LH & RH ASSY / ECU & RELAY / FUSEBOX / LOCK SET KIT

SR. NO.	PART NUMBERS	PART DESCRIPTION	FRT	QTY	REMARKS
1	T13010J30020T	SIDE PANEL LH TEXTURE BLACK	0.2	1	
2	SF0212037	SCREW RDSKT M6X1X12X8.8	0.2	7	
3	T14010KW0010N	TOOL KIT	0.2	1	
4	T14010KE0010N	TOOL KIT BAND	0.3	1	
5	T18080KS0020N	DAMPER SIDE PANEL LOCK	0.2	2	
6	T13010J30060N	BEAD SIDE PANEL	0.1	2	
7	T13010J30120B	BOX SIDE COVER LH - SIRIUS WHITE	0.1	1	
7.1	T13010J30120J	BOX SIDE COVER LH - MYSTIC COPPER	0.1	1	
7.2	T13010J30120W	BOX SIDE COVER LH - BLACK GLOSS	0.1	1	
7.3	T13010J30120E	BOX SIDE COVER LH - CHROME BLACK GLOSS WITH DECAL	0.1	1	
8	T2401FKW0010N	SIDE COVER LOCK	0.2	2	
9	T13010KT0140N	GROMMET SIDE COVER FRONT	0.2	2	
10	T13010J30030T	SIDE PANEL RH TEXTURE BLACK	0.3	1	
11	T13010KT0120N	PLUG SIDE COVER	0.1	2	
12	T1502GJ30060N	ELECTRONIC CONTROL UNIT	0.3	1	
12.1	T1502GJ30100N	ELECTRONIC CONTROL UNIT - OBD-II STG 2_EURO-5+	0.5	1	
13	T13010J30070N	BRACKET ECU MTG.	0.2	1	
14	95701-06012-00	BOLT FL.6 X 12	0.2	2	
15	T13010J30080N	BRACKET RELAY MOUNTING	0.2	1	
16	T1501FKW0120N	MINI RELAY (RESISTOR TYPE)	0.2	5	
17	T13010J30100N	SIDE PANEL RUBBER CAP	0.3	1	
18	T2201BJ30020N	STAY EXHAUST MTG RH	0.5	1	
19	SP0906041	FLANGED HEAD BOLT-SH M6X12	0.2	4	
20	T2201BJ30010N	STAY EXHAUST MTG LH	0.5	1	
21	T13010J30130B	BOX SIDE COVER RH - SIRIUS WHITE	0.1	1	
21.1	T13010J30130J	BOX SIDE COVER RH - MYSTIC COPPER	0.1	1	
21.2	T13010J30130W	BOX SIDE COVER RH - BLACK GLOSS	0.1	1	
21.3	T13010J30130E	BOX SIDE COVER RH - CHROME BLACK GLOSS WITH DECAL	0.1	1	
22	T13010J30090N	AIR FILTER ENTRY DUCT COVER	0.5	1	
23	95701-06010-08	BOLT FLANGE 6X10	0.2	2	

35 SIDE PANEL LH & RH ASSY / ECU & RELAY / FUSEBOX / LOCK SET KIT

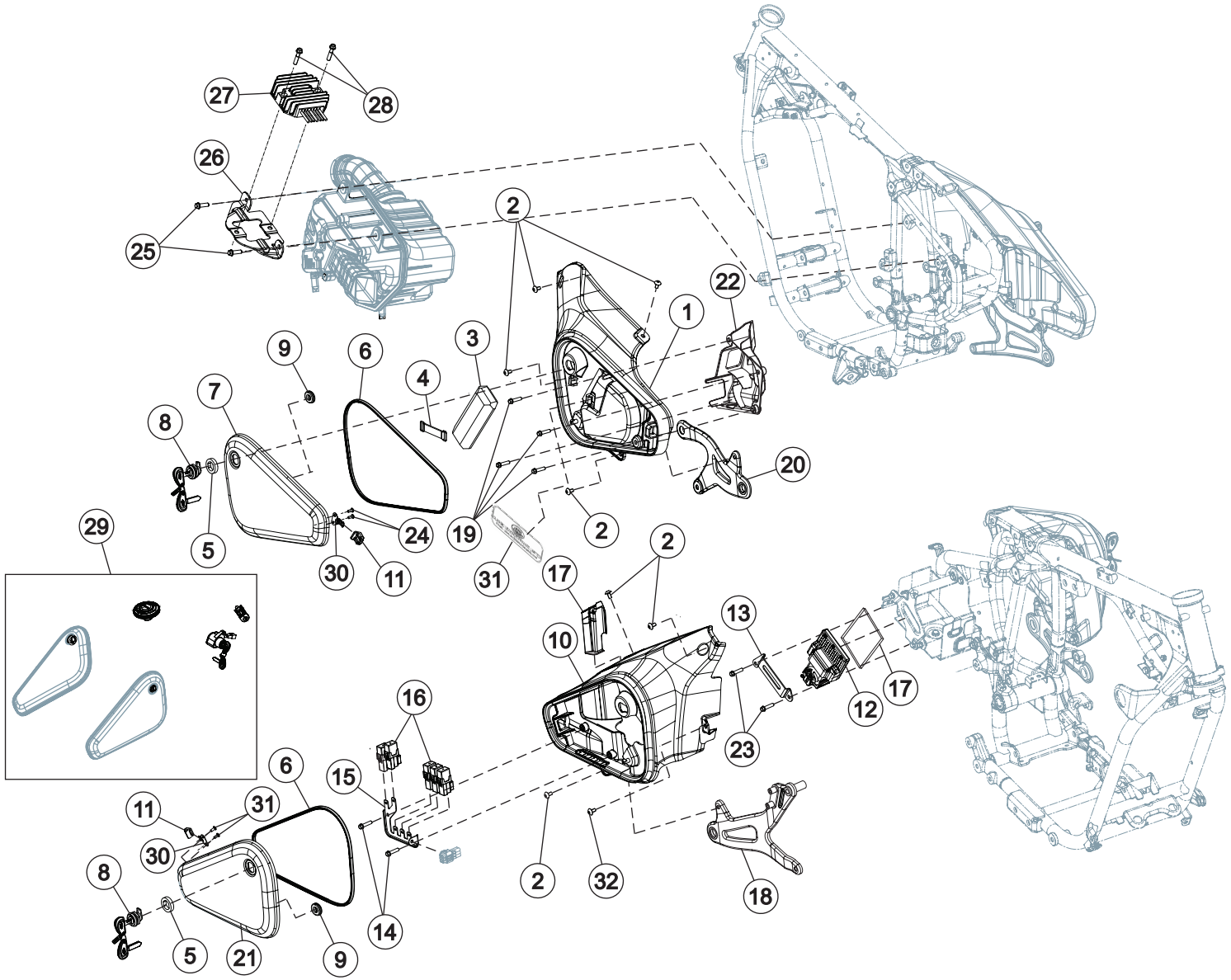

35 SIDE PANEL LH & RH ASSY / ECU & RELAY / FUSEBOX / LOCK SET KIT

SR. NO.	PART NUMBERS	PART DESCRIPTION	FRT	QTY	REMARKS
24	SF0212024	SCREW RDSKT M5X0.8X12XA2-70	0.3	4	
25	SP0906029	FLANGE BOLT M6 X 20	0.4	2	
26	T08000J30090N	RR MOUNTING LOOSE BRACKET	0.5	1	
27	T1501CJ30010N	REGULATOR RECTIFIER - J301	0.5	1	
28	SF0102034	FLANGE HEAD BOLT SH M6X28	0.4	2	
29	T08000KW0200N	LOCK SET KIT	0.8	1	
30	T13010J30140N	SIDE PANEL REAR MOUNTING BRACKET	0.3	2	
31	T13010KW0290N	MANUFACTURER LABEL STICKER	0.2	1	
32	SF0212048	SCREW RDSKT M6X1X16X8.8	0.2	1	

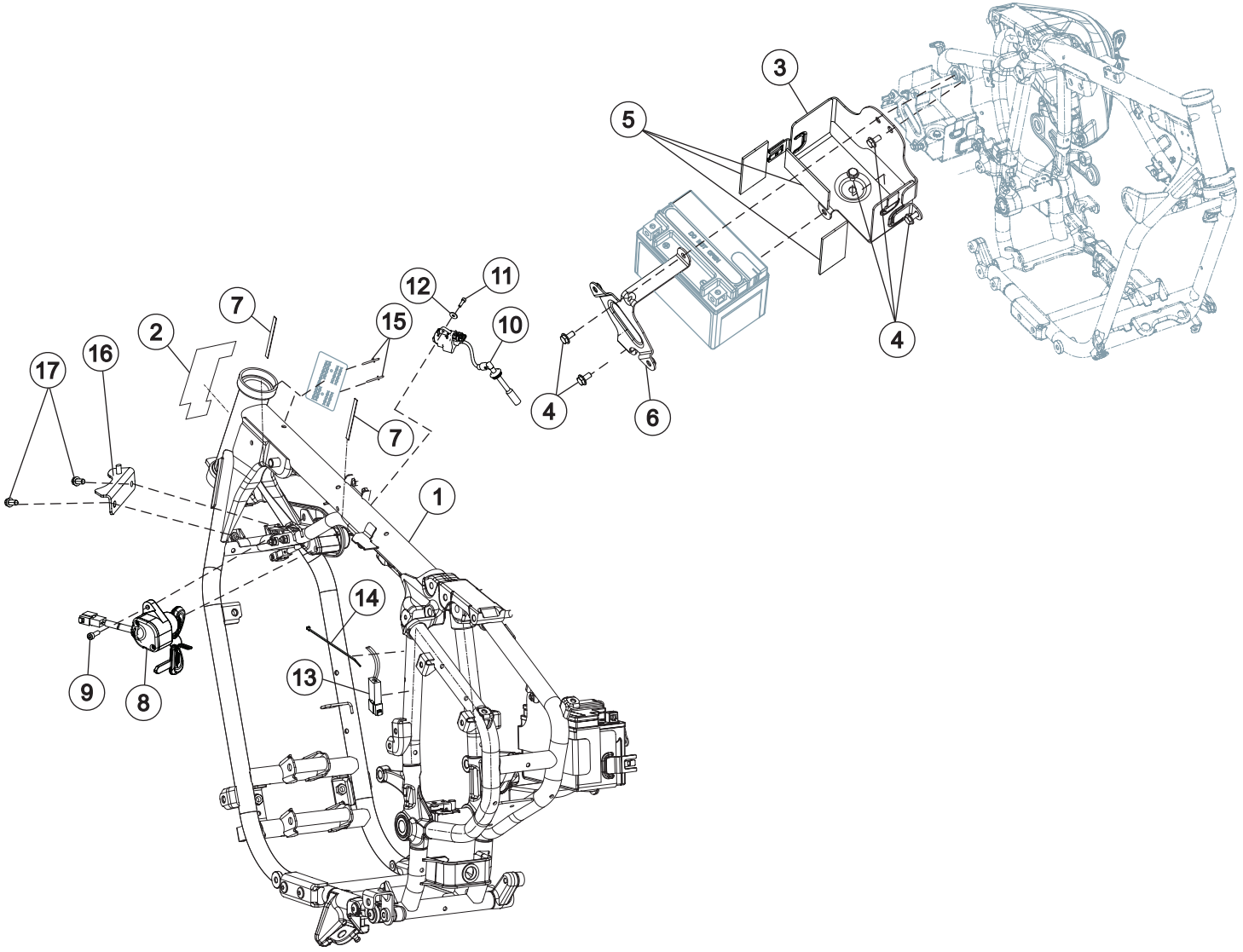
1
2
3
4
5
6
7
8
9
10
11
12
13
14
15
16
17

36 FRAME ASSEMBLY & FRAME MOUNTINGS

SR. NO.	PART NUMBERS	PART DESCRIPTION	FRT	QTY	REMARKS
1	T08000J30160N	FRAME ASSEMBLY KIT	14	1	
2	T08000J10010N	ANTI ABRASIVE TAPE HEAD PIPE	0.3	1	
3	T08000J30020N	BATTERY BOX	0.6	1	
4	95701-06012-00	BOLT FL.6 X 12	0.2	5	
5	T1503DKE0250N	PAD BATTERY BOX	0.4	6	
6	T08000J30040N	CLAMP BATTERY BOX	0.3	1	
7	T0702JKE0010N	CLAMP THROTTLE CABLE	0.5	3	
8	T1501NKW0010N	IGNITION SWITCH ASSY	0.7	1	
9	TSF0101269	HEX BOLT 5 X 12	0.7	1	
10	T1502CKE0050N	IGNITION COIL WITH CABLE	0.8	1	
11	SP0906029	BOLT, HEX FLANGE HEAD SH-M6X20	0.5	1	
12	TSF0401124	WASHER 6.5X20X1.6	0.5	1	
13	T1501AKW0230N	BYPASS RESISTOR ROS	1.0	1	
14	T1501AKE2050E	CABLE STRAP 200MM	1.0	1	
15	SF0508001	POP RIVET 3.2 DIA	0.4	2	
16	T08010KW0490E	ADD-ON BRACKET FOR STEERING LOCK – EUIV	0.4	1	
17	TSF0102271	HEX FLANGE BOLT M6*18	0.3	2	

37 FOOTREST ASSEMBLY LH & RH

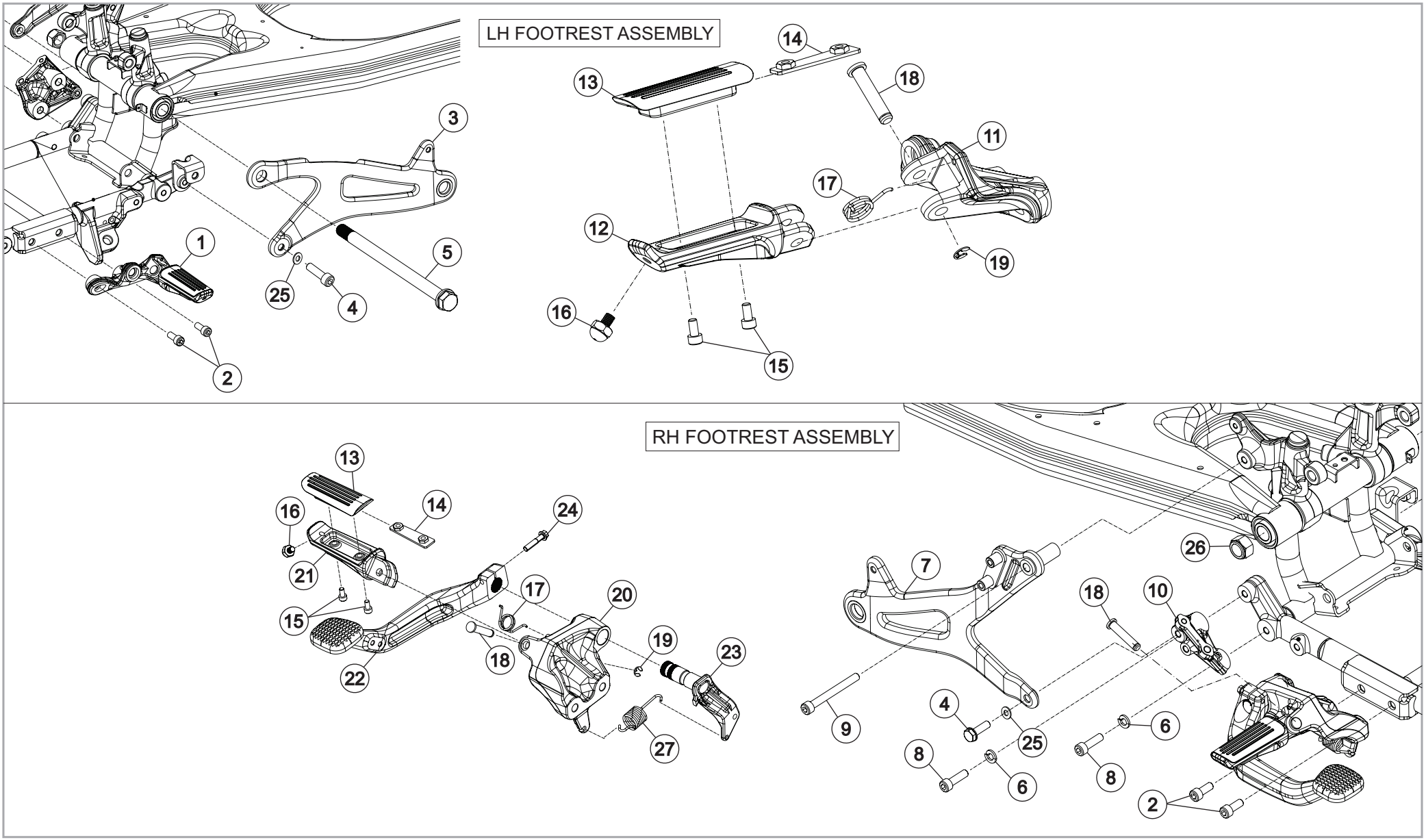

37 FOOTREST ASSEMBLY LH & RH

SR. NO.	PART NUMBERS	PART DESCRIPTION	FRT	QTY	REMARKS
1	T22010J30010T	RIDER FOOTREST ASSEMBLY LH	0.3	1	
2	SP0308009	SOCKET HEAD SCREW M8X20	0.3	4	
3	T2201BJ30010N	STAY EXHAUST MTG LH	0.7	1	
4	SF0224181	SCREW SOCKET M8X1.25X28X10.9	0.4	2	
5	T1101CKW0010N	SWING ARM AXLE M16	0.6	1	
6	SP3908001	SPRING WASHER (M8)	0.2	2	
7	T2201BJ30020N	STAY EXHAUST MTG RH	0.7	1	
8	SF0224181	SCREW SOCKET M8X1.25X28X10.9	0.3	2	
9	TSF0212016	SOCKET HEAD SCREW M8X70	0.3	1	
10	T2201BJ30030N	RMC & MUFFLER MOUNTING BRACKET	0.5	1	
11	T22000J30020T	CLEVIS, RIDER FOOTREST LH	0.3	1	
12	T2201AB10020W	RIDER FOOTREST LH SATIN BLACK	0.3	1	
13	T2201AB10010N	RUBBER, FOOTREST	0.3	2	
14	T2201BB10070N	BRACKET FOOTREST GRIP	0.3	2	
15	TSF0224077	BOLT, SOCKET HEAD M5X0.8X10	0.2	4	
16	T22000J20080N	PIN FRICTION FREE	0.2	2	
17	T2201AKW0130E	SPRING TORSION RIDER FOOTREST	0.2	2	
18	T2201BY50080N	PIVOT RIDER FOOTREST	0.2	2	
19	MH01890000800	SEEGER DIAMETER 5 UNI 7434	0.2	2	
20	T22000J30010T	CLEVIS, RIDER FOOTREST RH	0.3	1	
21	T2201AB10030W	RIDER FOOTREST RH SATIN BLACK	0.3	1	
22	T20010J30030T	REAR BRAKE LEVER COMPLETE	0.5	1	
23	T2001CJ30030N	PIVOT LINK REAR BRAKE LEVER	0.3	1	
24	SF0202349	SCREW HEX FL M6X1X28X8.8	0.4	1	
25	SF0401479	WASHER PLAIN M8X14X2	0.2	2	
26	TSF0318003	SELF LOCK NUT M16	0.2	1	
27	T2001BJ30010N	RETURN SPRING, REAR BRAKE PEDAL	0.3	1	

38 ENGINE MOUNTING SYSTEM & GEAR SHIFT LEVER ASSEMBLY

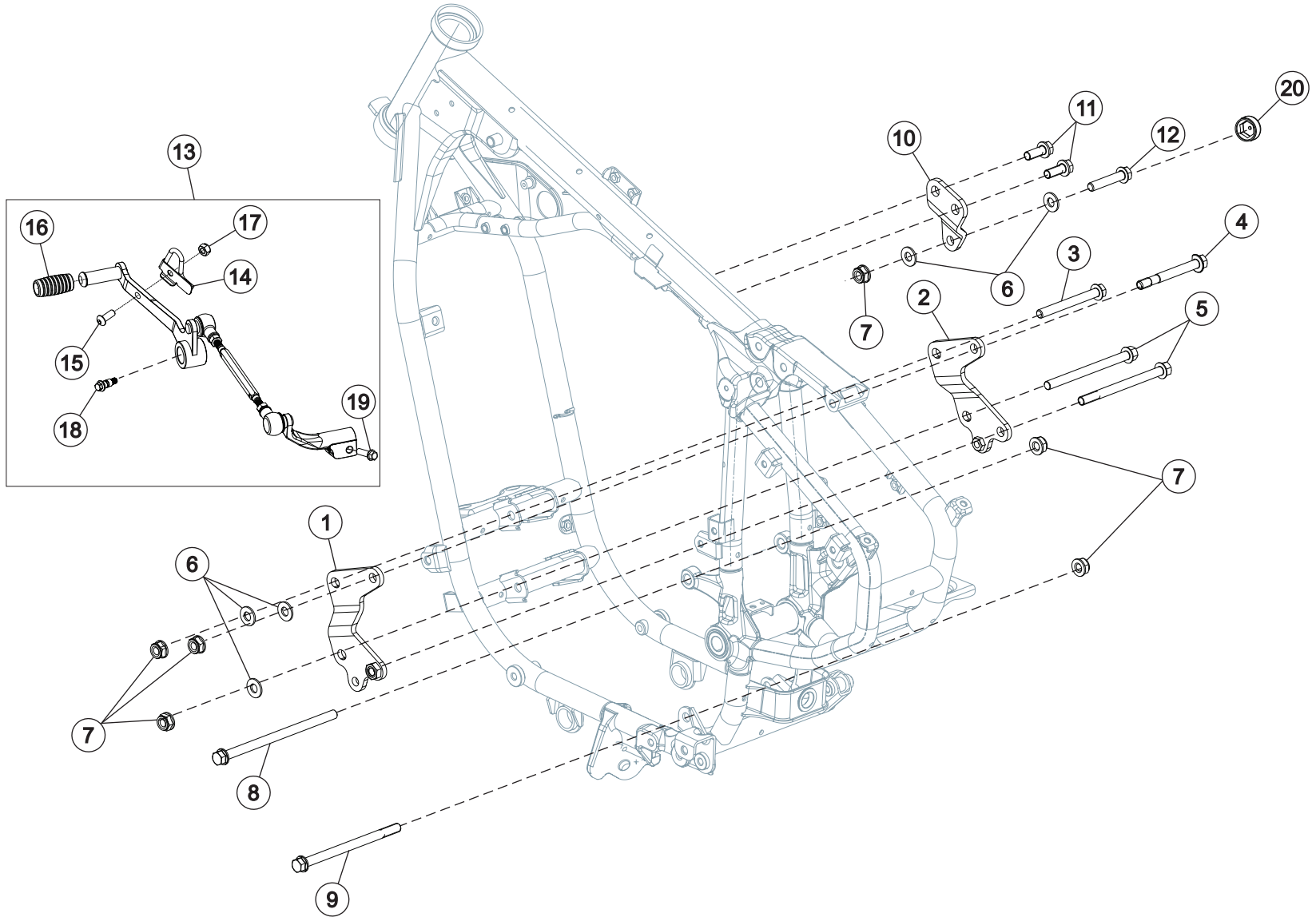

38 ENGINE MOUNTING SYSTEM & GEAR SHIFT LEVER ASSEMBLY

SR. NO.	PART NUMBERS	PART DESCRIPTION	FRT	QTY	REMARKS
1	T2101DKW0010W	FR ENGINE BRACKET LH BLACK GLOSSY	0.7	1	
2	T2101DKW0020W	FR ENGINE BRACKET RH BLACK GLOSSY	0.7	1	
3	TSF0102299	FLANGED BOLT M10 x 90	0.7	1	
4	SF0100129	BOLT SPECIAL M10*1.25*90*10.9	0.8	1	
5	TSF0102300	FLANGED BOLT M10 x 125	0.8	2	
6	TSF0401130	WASHER M10 (110*22*2.0)	1.0	5	
7	TSF0318009	FLANGE U NUT M10x1.25	0.7	6	
8	SF0102544	BOLT HEX FL M10X1.25X175X10.9	0.7	1	
9	SF0102545	BOLT HEX FL M10X1.25X150X10.9	0.9	1	
10	T2101DKW0030W	TOP ENGINE BKT LH BLACK GLOSSY	0.7	1	
11	SF0202258	SCREW HEX FL M10X1 5X25X8 8	0.7	2	
12	TSF0102302	FLANGED BOLT M10 X 50	0.7	1	
13	T0215DJ30070N	GEAR SHIFT LEVER COMP ASSLY	0.4	1	
14	T0215DJ30060N	STOPPER HOOK GEAR SHIFT LEVER	0.2	1	
15	TSF0212011	BUTTON HEAD SOCKET SCREW M6x16	0.1	1	
16	MH00590000400	GRIP GEAR LEVER	0.1	1	
17	TSF0318007	M6 NYLOC NUT (BLACK)	0.1	1	
18	T20010KW0150N	PIN PIVOT, REAR BRAKE PEDAL	0.1	1	
19	SP0906029	FLANGE BOLT M6 x 20 (WHITE)	0.1	1	
20	T14000Y50630N	CAP M10 BOLT	0.1	1	

39 HANDLE BAR ASSEMBLY

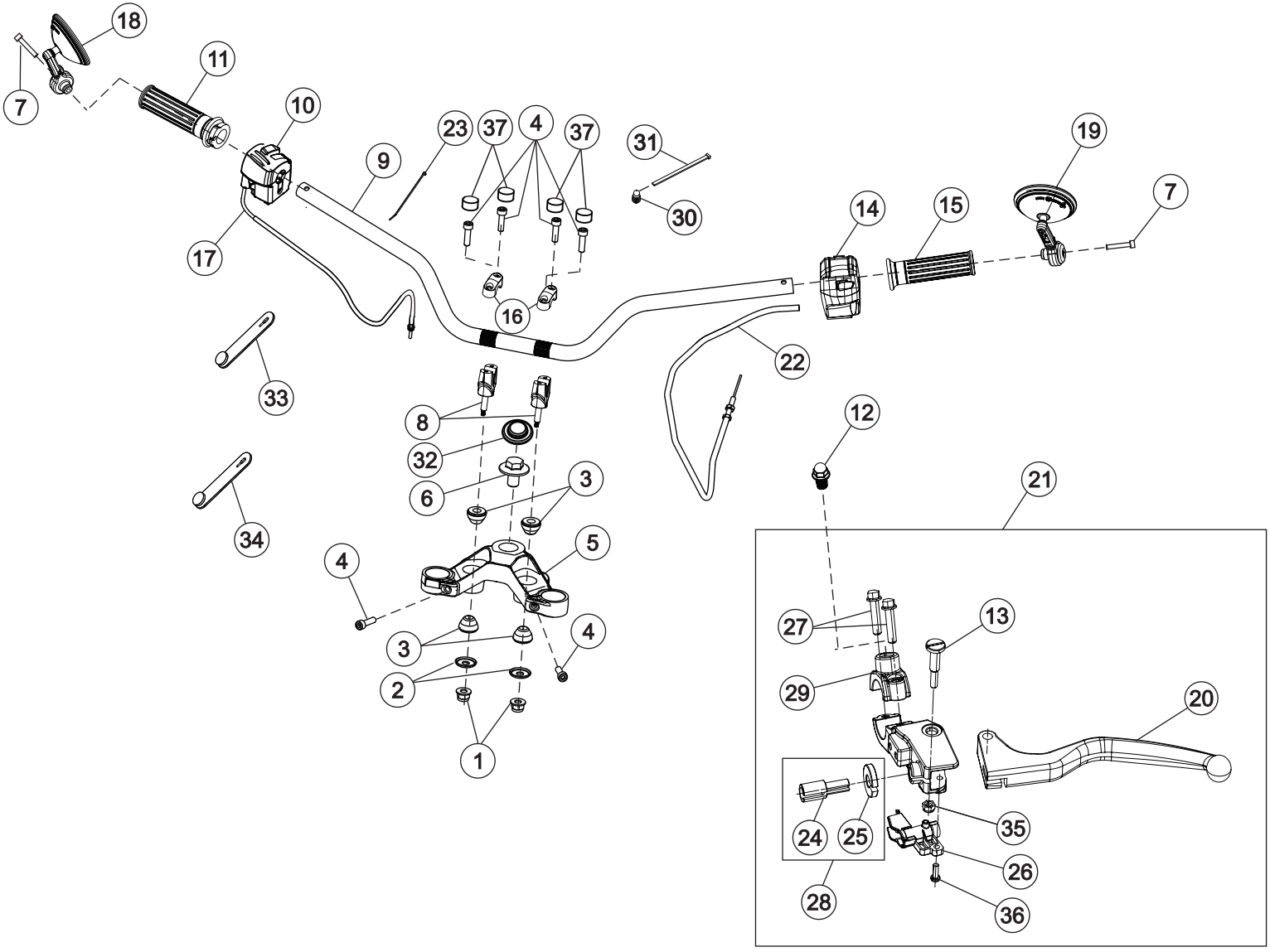

39 HANDLE BAR ASSEMBLY

SR. NO.	PART NUMBERS	PART DESCRIPTION	FRT	QTY	REMARKS
1	TSF0318005	SELF LOCK NUT M8	0.2	2	
2	T0505HB10010N	SHOT, SILENT BLOCK_B1	0.8	2	
3	T0701JY50030K	SILENT BLOCK	0.8	4	
4	SF0224181	SOCKET HEAD SCREW M8 X 28	0.7	6	
5	T0505DJ30010T	UPPER BRACKET	0.8	1	
6	T07000KW0050N	STEERING TOP BOLT M16X1.25X25X8.8	0.5	1	
7	SF0212024	SCREW RDSKT M5X0.8X12XA2-70	0.1	2	
8	T0701HJ30010T	HANDLE BAR HOLDER LOWER	0.7	2	
9	T07000KW0020W	HANDLE BAR TUBE - GLOSS BLACK	1.0	1	
10	T1501MJ20020N	SWITCH ASSEMBLY RH	0.5	1	
11	T0701DB10020N	THROTTLE CONTROL TUBE WITH HANDLE GRIP RH	0.5	1	
12	T0701CJ30010N	PLUG CAP LH	0.1	1	
13	T0701CY50050N	PIVOT CLUTCH LEVER	0.3	1	
14	T1501MJ20010N	SWITCH ASSEMBLY LH	0.4	1	
15	T0701DB10010N	HANDLE GRIP LH	0.4	1	
16	T0701GB10010T	HANDLE BAR HOLDER UPPER	0.5	2	
17	T2401DY40010N	THROTTLE CABLE	0.6	1	
18	T14040B10060N	MIRROR ASSY RH HANDLE END - BLACK	0.2	1	
19	T14040B10050N	MIRROR ASSY LH HANDLE END - BLACK	0.2	1	
20	T0701CY50120E	CLUTCH LEVER BLACK	0.7	1	
21	T0701CY50020N	CLUTCH LEVER ASSY-NEW SWITCH	0.7	1	
22	T2401HJ20010N	CLUTCH CABLE ASSEMBLY - BSVI	0.6	1	
23	T15000KW0050N	RUBBER STRAP - HANDLE BAR_98MM	0.1	4	
24	T07000Y50020N	ADJUSTING SCREW CLUTCH LEVER	0.2	1	
25	T07000Y50030N	CHECK NUT CLUTCH LEVER	0.4	1	
26	T0701CB10030N	CLUTCH SWITCH	0.2	1	
27	T0701CY50060N	FLANGE BOLT M6	0.2	4	
28	T0701CY50100N	KIT CHECK NUT	0.4	1	
29	T0701CY50040N	HOLDER UPPER	0.4	1	
30	T25010KW0032N	CABLE TIE CLAMP, BRAKE HOSE_HELLERMANN	0.2	2	

39 HANDLE BAR ASSEMBLY

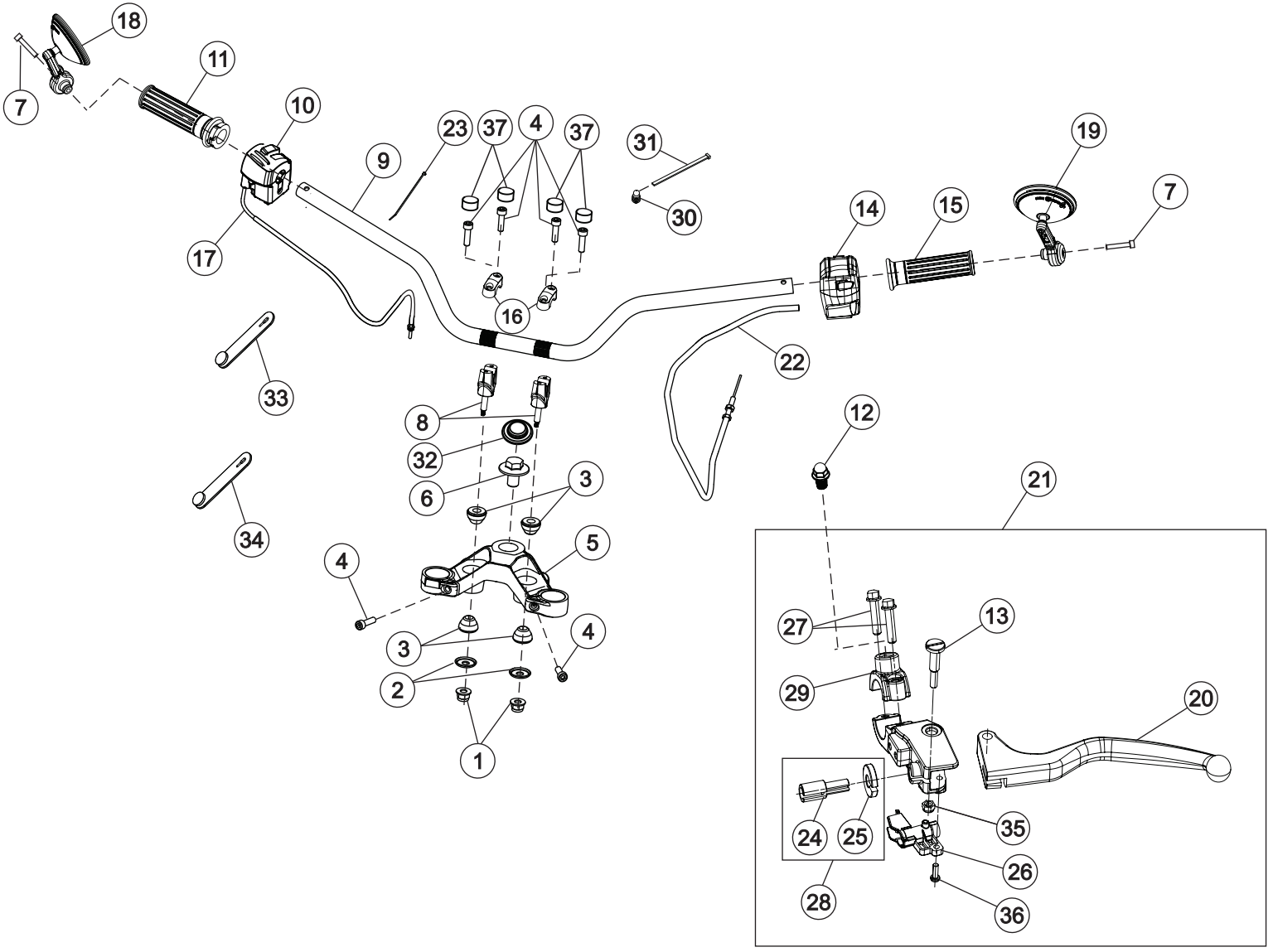

39 HANDLE BAR ASSEMBLY

SR. NO.	PART NUMBERS	PART DESCRIPTION	FRT	QTY	REMARKS
31	T1501AKE2052E	CABLE STRAP 200MM_HELLERMANN	0.2	2	
32	T07000KW0060N	CAP STEERING	0.2	1	
33	T08000B10450N	RUBBER STRAP 140 MM	0.1	1	
34	T08000B10410N	RUBBER STRAP 60 MM	0.1	2	
35	T0701CY50070N	NUT NYLOC M5	0.1	1	
36	T0701CY50110N	SCREW M4 X 10	0.2	1	
37	T0701GY50020N	HANDLE BAR HOLDER UPPER BOLT CAP	0.2	4	

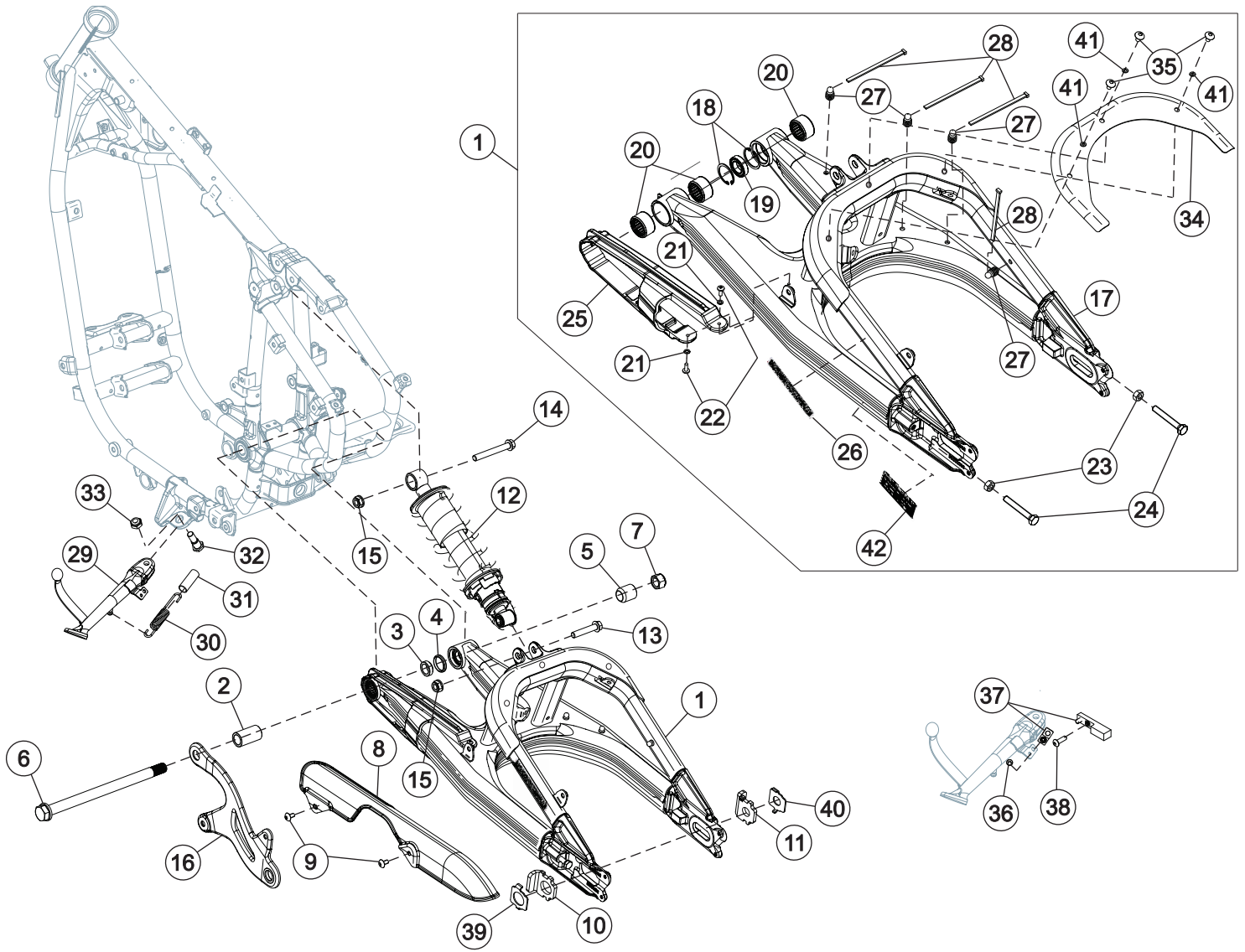
1
2
3
4
5
6
7
8
9
10
11
12
13
14
15
16
17
18
19
20
21
22
23
24
25
26
27
28
29
30
31
32
33
34
35
36
37
38
39
40
41
42

40 SWING ARM ASSEMBLY / REAR SHOCK ABSORBER / SIDE STAND ASSEMBLY

SR. NO.	PART NUMBERS	PART DESCRIPTION	FRT	QTY	REMARKS
1	T11010J30040N	SWING ARM SUB-ASSY	3.5	1	
2	T1101AKW0010N	BUSH INNER LH	3.5	1	
3	T1101AKW0020N	BUSH INNER RH	3.5	1	
4	T1101AKW0040N	COLLAR - BUSH INNER RH	3.5	1	
5	T1101AKW0030N	BUSH OUTER RH	3.5	1	
6	T1101CKW0010N	SWING ARM AXLE M16	0.6	1	
7	TSF0318003	SELF LOCK NUT M16	0.2	1	
8	T1103AJ30010E	CHAIN COVER	0.4	1	
9	SF0212037	SCREW RDSKT M6X1X12X8.8	0.2	2	
10	T08000KW0610N	SWING ARM CHAIN ADJUSTER LH	0.8	1	
11	T08000KW0620N	SWING ARM CHAIN ADJUSTER RH	0.8	1	
12	T11020J30010N	REAR SHOCK ABSORBER	0.8	1	
13	TSF0102302	FLANGED BOLT M10 X 50	0.4	1	
14	TSF0102301	FLANGE BOLT M10 X 75	0.4	1	
15	TSF0318009	FLANGE U NUT M10x1.25	0.4	2	
16	T2201BJ30010N	STAY EXHAUST MTG LH	0.8	1	
17	T11010J30010W	SWING ARM	3.5	1	
18	SF0602002	CIRCLIP INT - LUG 30X1.2XPH	3.5	2	
19	SP010100119	BEARING DG BALL SR 17X30X7	3.5	1	
20	6801CAP00021N	NEEDLE_ROLLER_BEARING	3.5	3	
21	94101-04700	WASHER 4MM	0.2	2	
22	TSF0214025	TAPPING SCREW M4X12	0.2	2	
23	SF0301245	NUT HEX M8X1.25X6.8X8	0.2	2	
24	SF0201389	SCREW HEX M8X1.25X55X8.8	0.2	2	
25	T1103BJ30010N	CHAIN SLIDER	1.0	1	
26	T13200J30010N	CAUTION STICKER	0.1	1	
27	T25010KW0032N	CABLE TIE CLAMP, BRAKE HOSE_HELLERMANN	0.2	6	
28	T1501AKE2052E	CABLE STRAP 200MM_HELLERMANN	0.2	6	
29	T2301AJ30010W	SIDE STAND BLACK GLOSSY	0.5	1	
30	T2302BKW0010N	SPRING SIDE STAND	0.2	1	

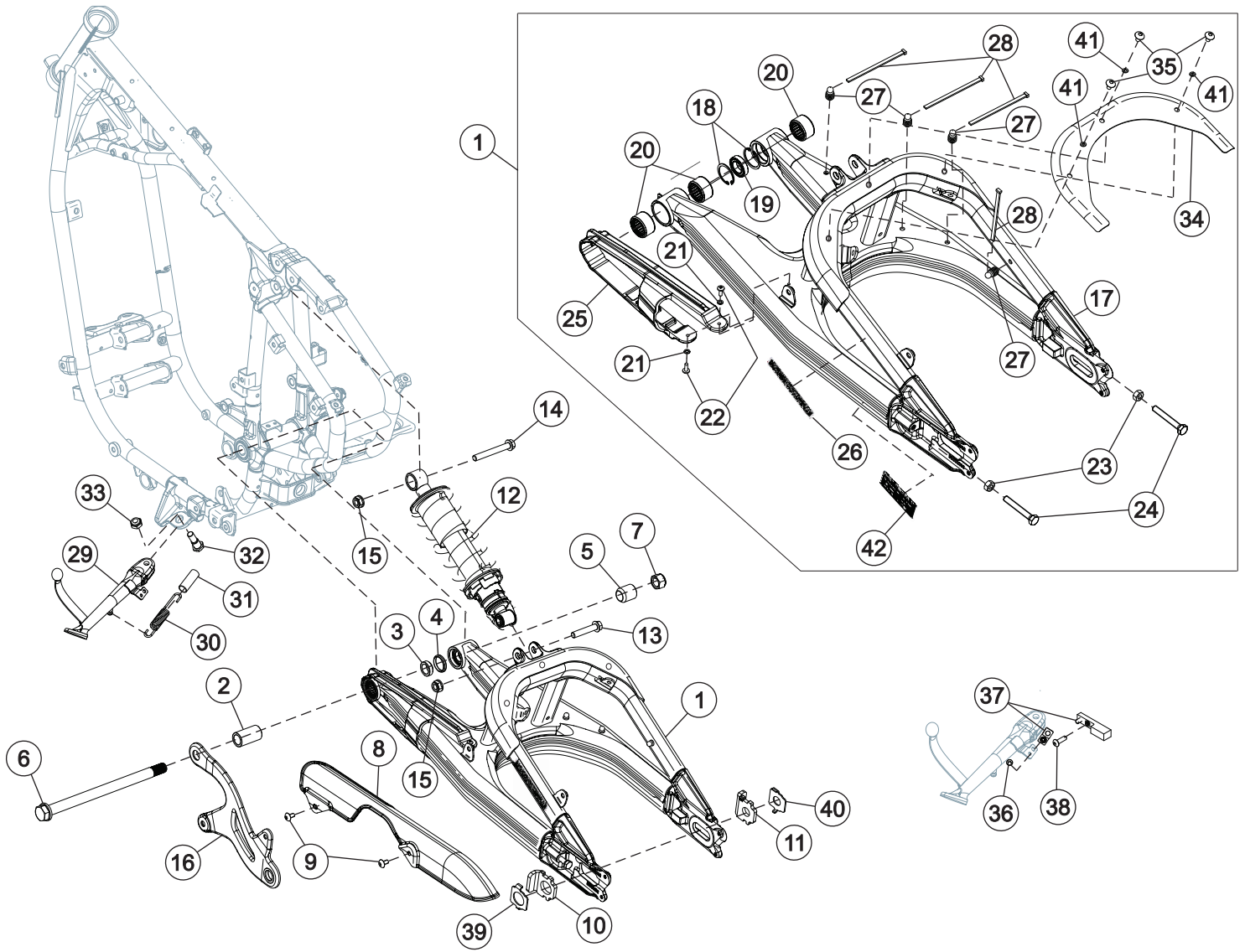
1
2
3
4
5
6
7
8
9
10
11
12
13
14
15
16
17
18
19
20
21
22
23
24
25
26
27
28
29
30
31
32
33
34
35
36
37
38
39
40
41
42

40 SWING ARM ASSEMBLY / REAR SHOCK ABSORBER / SIDE STAND ASSEMBLY

SR. NO.	PART NUMBERS	PART DESCRIPTION	FRT	QTY	REMARKS
31	T20000KW0140N	RUBBER SLEEVE , RETURN SPRING	0.2	1	
32	T2302BKW0020N	STEP BOLT SIDE STAND	0.4	1	
33	SF0302158	NUT NYLOC M10X1.25X11.50X6	0.2	1	
34	T11010J30060W	SWING ARM COVER BLACK GLOSSY	0.2	1	
35	SP0212001	BUTTON HEAD SOCKET SCREW M6X10	0.2	3	
36	93500-04010-OH	SCREW PAN 4X10	0.1	1	
37	T1501MKW0050N	SIDE STAND SWITCH ASSEMBLY	0.7	1	
38	SF0212036	SCREW RDSKT M5X0.8X16X8.8	0.1	1	
39	T11010KW0070N	WASHER PLATE LH	0.3	1	
40	T11010KW0080N	WASHER PLATE RH	0.3	1	
41	TSF0401132	WASHER M6 (6.5 X 12 X 2)	0.2	3	
42	T14000J30150N	NOISE LABEL STICKER	0.1	1	

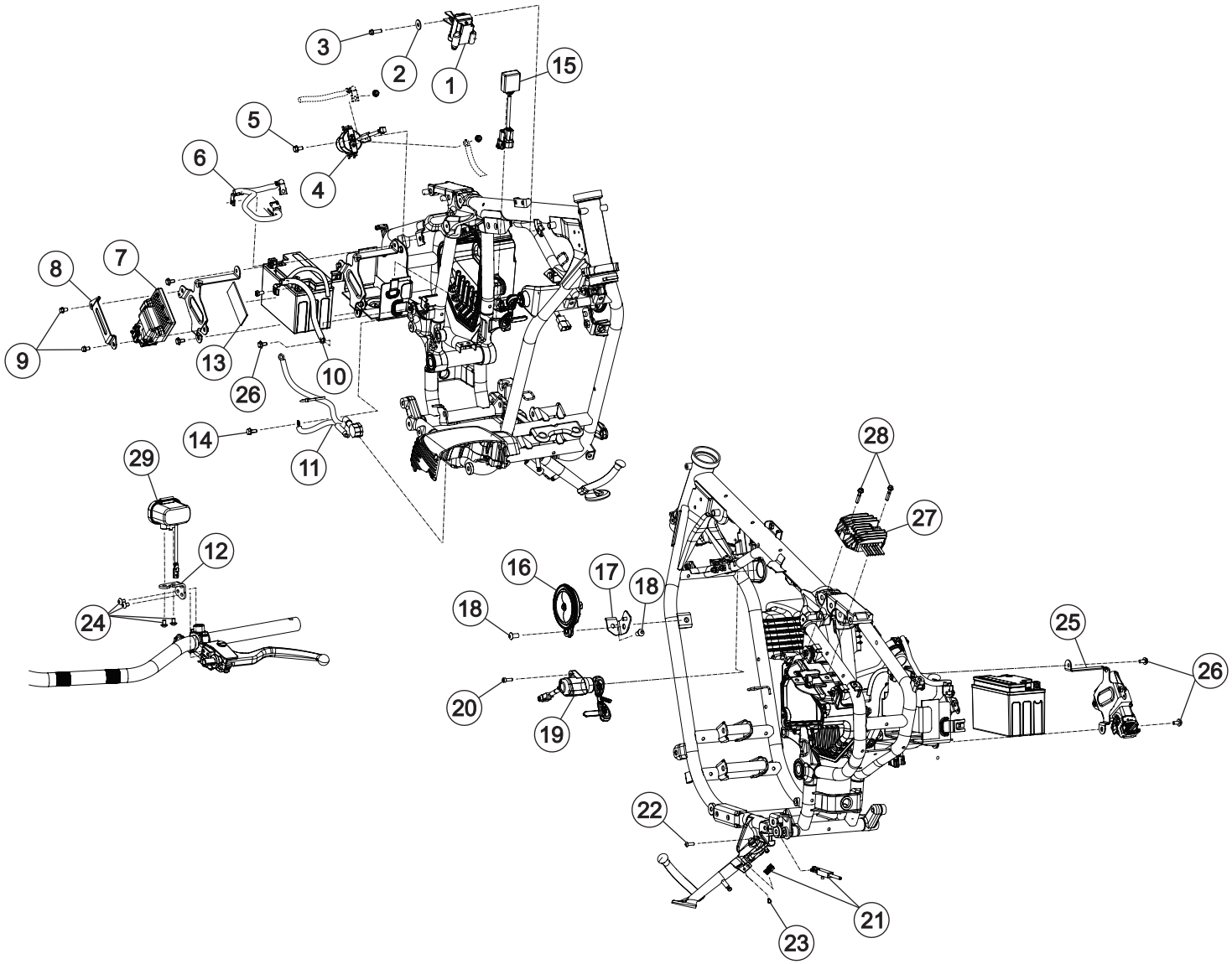
3
2
1
15
5
6
4
8
7
9
13
26
10
14
11
29
12
24
28
27
16
17
18
18
25
26
20
19
22
21
23

41 ELECTRICAL COMPONENTS MOUNTING ON FRAME & HANDLE BAR

SR. NO.	PART NUMBERS	PART DESCRIPTION	FRT	QTY	REMARKS
1	T1502CKE0050N	IGNITION COIL WITH CABLE	0.8	1	
2	TSF0401124	WASHER 6.5x20x1.6	0.8	1	
3	SP0906029	BOLT, HEX FLANGE HEAD SH-M6X20	0.8	1	
4	T1503CKE0730E	STARTER RELAY	0.6	1	
5	95701-06012-00	BOLT FL.6 X 12	0.6	1	
6	T1503AJ30010N	WIRING BATTERY POSITIVE	0.4	1	
7	T1502GJ30060N	ELECTRONIC CONTROL UNIT	0.3	1	
7.1	T1502GJ30100N	ELECTRONIC CONTROL UNIT - OBD-II STG 2_EURO-5+	0.5	1	
8	T13010J30070N	BRACKET ECU MTG.	0.5	1	
9	95701-06010-08	BOLT FLANGE 6X10	0.3	2	
10	T1501AKW0110N	WIRING _BATTERY NEGATIVE_DABS	0.4	1	
11	T1503BJ30010N	WIRING STARTER MOTOR	0.6	1	
12	T07000B10020N	USB CHARGER STAY	0.3	1	
13	T1503DKE0250N	PAD BATTERY BOX	0.3	1	
14	TSF0102282	FLANGE BOLT M6*14	0.4	1	
15	T1501FY50030N	HAZARD RELAY - LED INDICATORS	0.6	1	
16	T1501BKW0050N	HORN ASSY_LOW TONE - 95 DIA	0.3	1	
17	T08000J20420N	HORN MTG BRACKET LOOSE	0.2	1	
18	SF0212042	SCREW RDSKT M8X1.25X15X8.8	0.1	2	
19	T1501NKW0010N	IGNITION SWITCH ASSY	0.7	1	
20	TSF0101269	HEX BOLT 5 x 12	0.7	1	
21	T1501MKW0050N	SIDE STAND SWITCH	0.7	1	
22	SP0705016	TRUSS HEAD SCREW M5X16	0.1	1	
23	93500-04010-OH	SCEW PAN M4X10 E02	0.1	1	
24	SF0212035	SCREW RDSKT M5X0.8X8X8.8	0.2	4	
25	T08000J30040N	CLAMP BATTERY BOX	0.3	1	
26	95701-06012-00	BOLT FL.6 X 12	0.2	3	
27	T1501CJ30010N	REGULATOR RECTIFIER - J301	0.5	1	
28	SF0102034	FLANGE HEAD BOLT SH M6X28	0.3	2	
29	T15000B10020N	USB CHARGING PORT	0.3	1	

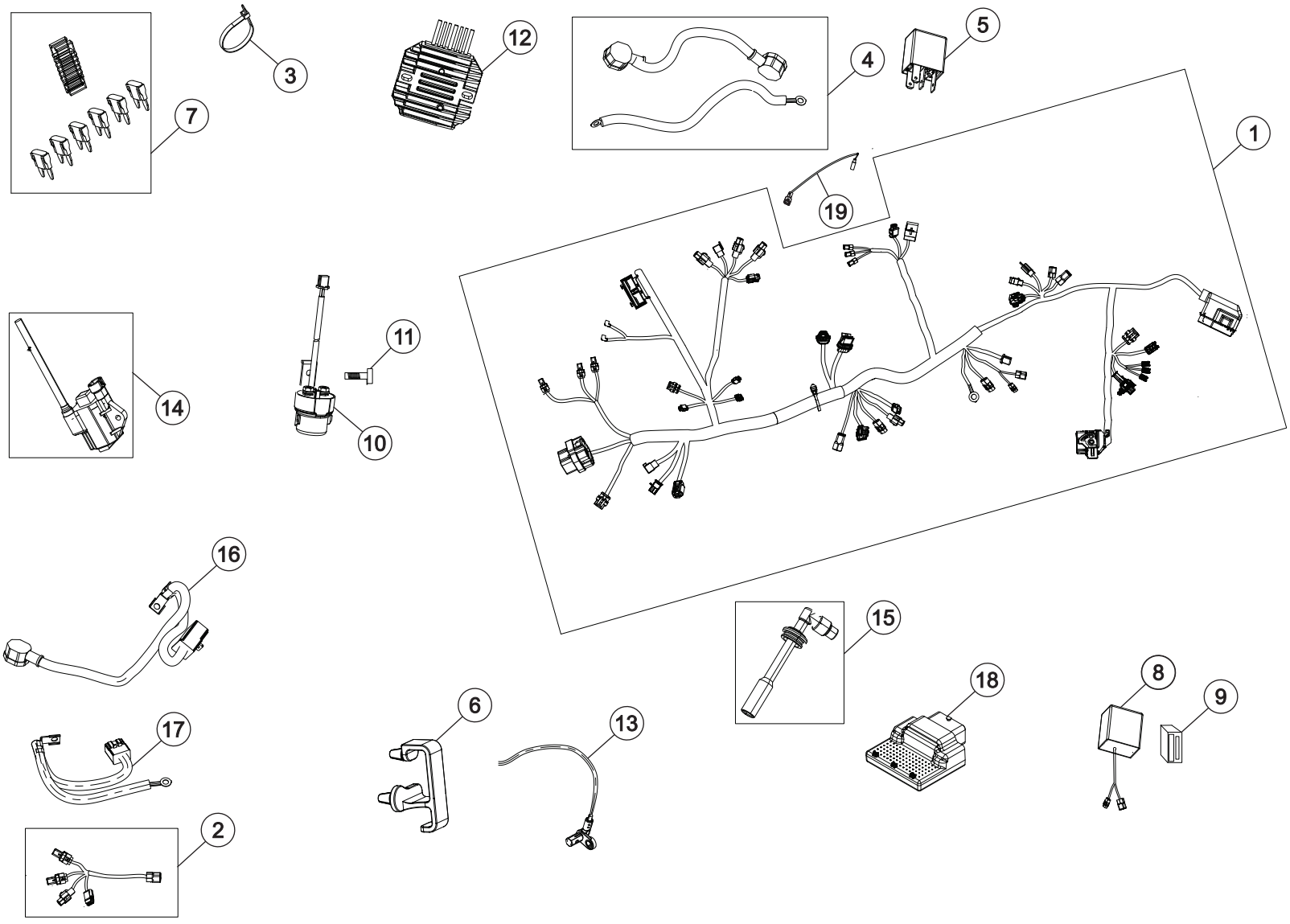
1
2
3
4
5
6
7
8
9
10
11
12
13
14
15
16
17
18
19

42 WIRING HARNESS & BATTERY WITH STARTER RELAY AND RELAY CORDSET

SR. NO.	PART NUMBERS	PART DESCRIPTION	FRT	QTY	REMARKS
1	T1501AJ30100N	WIRING HARNESS	2.0	1	
1.1	T1501AJ30120N	WIRING HARNESS - OBD-II STG 2_EURO-5+	2.0	1	
2	T1501AJ30090N	WIRING REAR LAMP	0.4	1	
3	T1501AKE2050E	CABLE TIES	0.2	16	
4	T1503BJ30010N	WIRING STARTER MOTOR	0.6	1	
5	T1501FKW0120N	MINI RELAY (RESISTOR TYPE)	0.3	3	
6	T1501AKW0090N	CLAMP_WIRING HARNESS	0.3	1	
7	T1501AKE2170N	SPARE FUSE KIT ASSY	0.1	1	
7.1	T1501AY50050N	FUSE 5A MINI	0.1	1	
7.2	T1501AY50060N	FUSE 10A MINI	0.1	1	
7.3	T1501AY50070N	FUSE 15A MINI	0.1	1	
7.4	T1501AY50080N	FUSE 20A MINI	0.1	1	
7.5	T1501AY50090N	FUSE 30A MINI	0.1	1	
8	T1501FY50030N	HAZARD RELAY - LED INDICATORS	0.6	1	
9	T1501JY40010N	HAZARD RELAY HOLDER	0.6	1	
10	T1503CKE0730E	STARTER RELAY	0.6	1	
11	95701-06012-00	BOLT FL.6X12	0.2	1	
12	T1501CJ30010N	REGULATOR RECTIFIER	0.5	1	
13	T0602FKE0010N	SPEED SENSOR FRONT WHEEL_M104	0.6	2	
14	T1502CKE0050N	IGNITION COIL WITH CABLE	0.8	1	
15	T1502FUF0330N	NOISE SUPPRESOR CAP	0.4	1	
16	T1503AJ30010N	WIRING BATTERY POSITIVE	0.4	1	
17	T1501AKW0110N	WIRING BATTERY NEGATIVE_DABS	0.4	1	
18	T1502GJ30060N	ELECTRONIC CONTROL UNIT	0.5	1	
18.1	T1502GJ30100N	ELECTRONIC CONTROL UNIT - OBD-II STG 2_EURO-5+	0.5	1	
19	T1501RKW0070N	WIRING DAIGNOSTICS 3_E5	0.4	1	

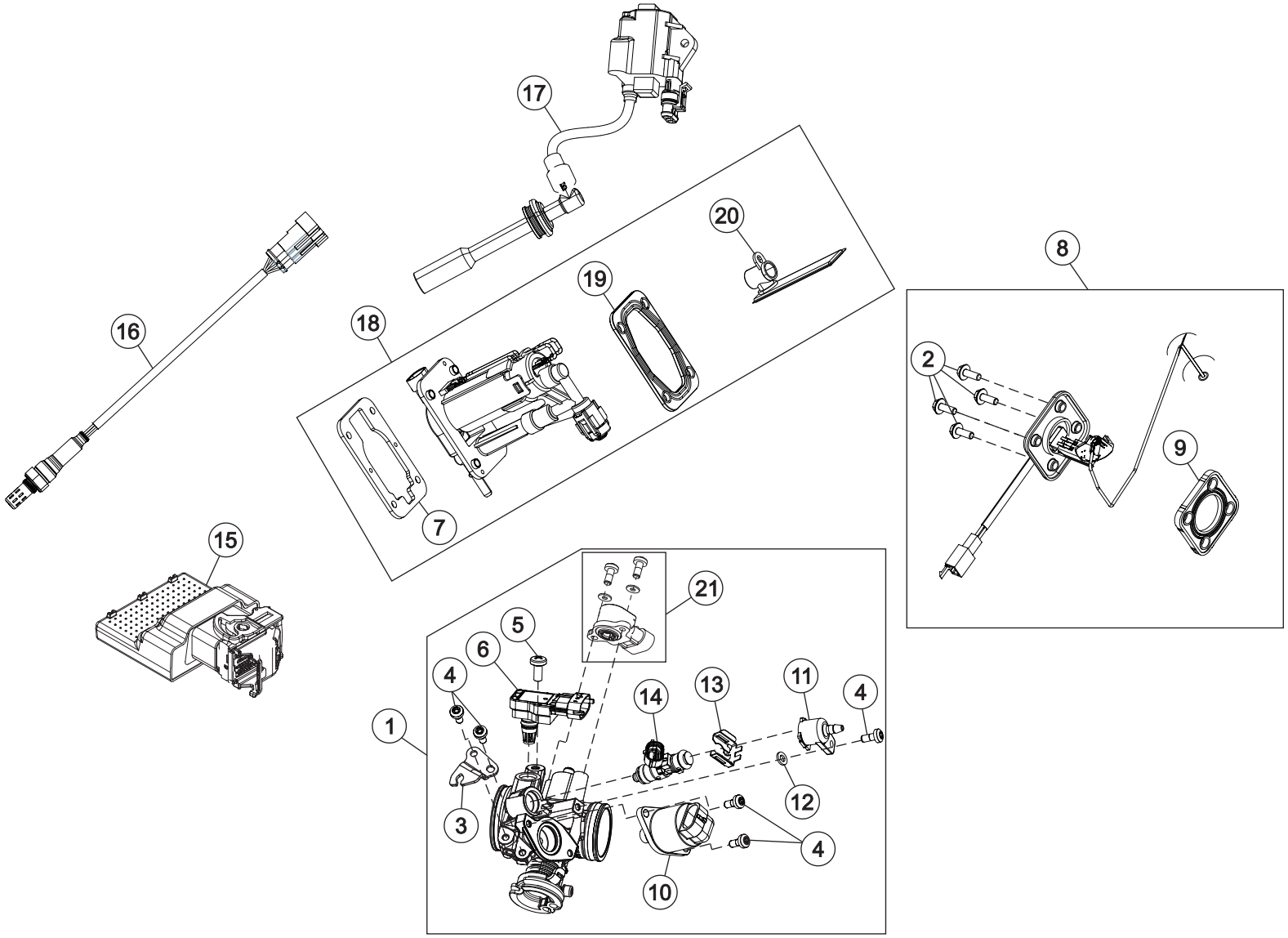
17
16
18
19
20
8
2
9
7
15
21
5
6
4
1
14
13
11
4
12
3
4
10

43 ELECTRONIC FUEL INJECTION (EFI) ASSEMBLY

SR. NO.	PART NUMBERS	PART DESCRIPTION	FRT	QTY	REMARKS
1	T0102HY50050N	THROTTLE BODY ASSEMBLY TYPE B	1.0	1	
2	SP0906041	FLANGED HEAD BOLT-SH M6X12	0.5	4	
3	T0102HKW0040N	THROTTLE CABLE BRACKET	0.5	1	
4	T1501PKW0050N	FASTNER-MTB	0.5	5	
5	T1502EKW0020N	FASTNER-TMAP	0.3	1	
6	T1502EKE0250N	TMAP_ECU_C	0.3	1	
7	T10050KW0050N	METAL FLANGE	0.7	1	
8	T1501PKW0010N	FUEL SENSOR UNIT	0.6	1	
9	T1501PKW0040N	RUBBER GASKET	0.6	1	
10	T1502HKE0020N	IACV_ECU C	0.5	1	
11	T1501PKW0020E	FUEL INJECTOR CAP	0.6	1	
12	T1501PKW0060N	SEPERATOR	0.6	1	
13	T0102BKE0050N	FIXING INJECTOR CLIP (DELLORTO)	0.6	1	
14	T1501PKE0020N	FUEL INJECTOR _ECU C	1.0	1	
15	T1502GJ30060N	ELECTRONIC CONTROL UNIT	0.3	1	
15.1	T1502GJ30100N	ELECTRONIC CONTROL UNIT - OBD-II STG 2_EURO-5+	0.5	1	
16	T15000Y50020N	LAMBDA SENSOR	0.4	1	
17	T1502CKE0050N	IGNITION COIL WITH CABLE	0.4	1	
18	T10050J20010N	FUEL PUMP	0.7	1	
19	T10050KW0060N	RUBBER GASKET	0.6	1	
20	T10050KW0040N	FUEL FILTER	0.8	1	
21	T0102HJ30040N	THROTTLE POSITION SENSOR KIT	0.5	1	

1



2



3



4



5



6



7

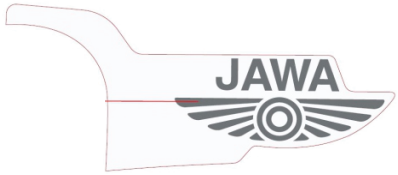

8



9

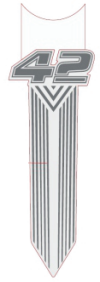

SR. NO.	PART NUMBERS	PART DESCRIPTION	FRT	QTY	REMARKS
1	T13200J30280N	DECAL SIDE PANEL LH_BLUE	0.4	1	
2	T13200J30210N	DECAL FUEL TANK RH_BLUE	0.4	1	
3	T13200J30200N	DECAL FUEL TANK LH_BLUE	0.4	1	
4	T13200J30220N	DECAL FUEL TANK LH_SILVER	0.4	1	
5	T13200J30230N	DECAL FUEL TANK RH_SILVER	0.4	1	
6	T13200J30620L	DECAL FUEL TANK_CZ-GREY LH	0.4	1	
7	T13200J30630L	DECAL FUEL TANK_CZ-GREY RH	0.3	1	
8	T13200J30260N	DECAL FUEL TANK CENTRE_BLUE	0.3	1	
9	T13200J30270N	DECAL FUEL TANK CENTRE_COOL GRAY	0.3	1	

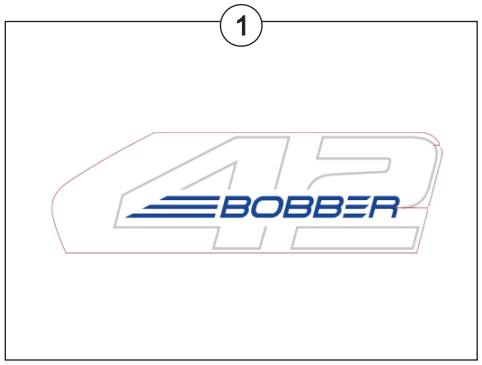
1

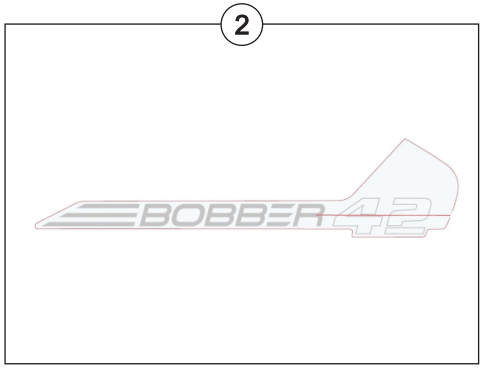
2

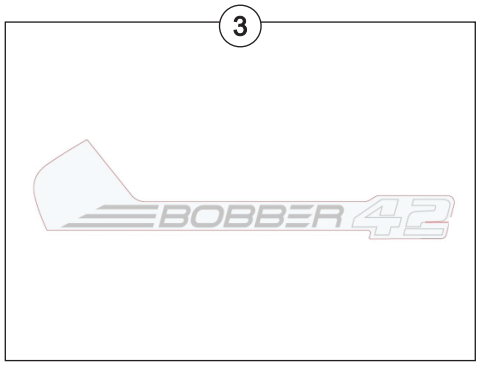
3

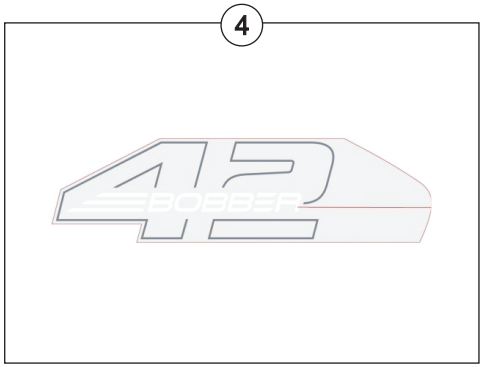
4

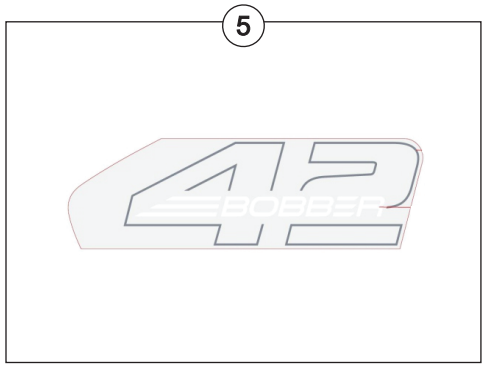
5

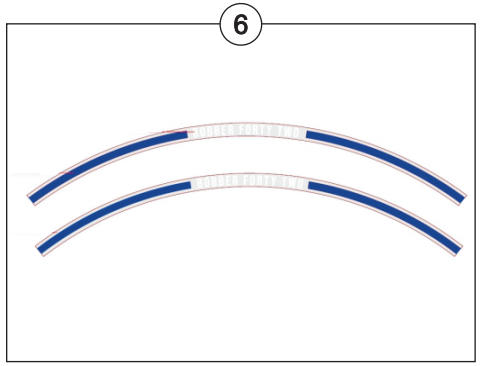
6

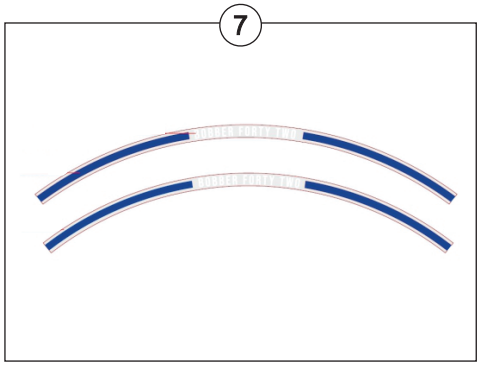
7

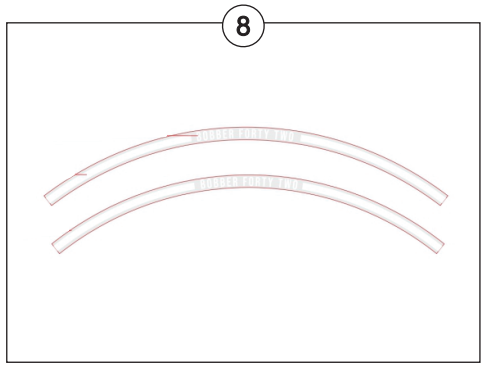
8

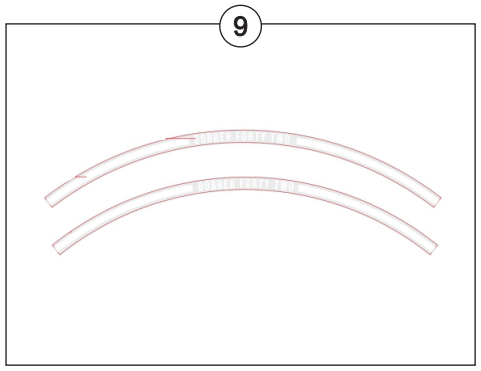
9

SR. NO.	PART NUMBERS	PART DESCRIPTION	FRT	QTY	REMARKS
1	T13200J30290N	DECAL SIDE PANEL RH_BLUE	0.4	1	
2	T13200J30300N	DECAL SIDE PANEL LH_SILVER	0.4	1	
3	T13200J30310N	DECAL SIDE PANEL RH_SILVER	0.4	1	
4	T13200J30320N	DECAL SIDE PANEL LH_COOL GRAY	0.4	1	
5	T13200J30330N	DECAL SIDE PANEL RH_COOL GRAY	0.4	1	
6	T13200J30340N	DECAL WHEEL FRONT_BLUE	0.3	2	
7	T13200J30350N	DECAL WHEEL REAR_BLUE	0.3	2	
8	T13200J30360N	DECAL WHEEL FRONT_WHITE	0.3	2	
9	T13200J30370N	DECAL WHEEL REAR_WHITE	0.4	2	

1


BOBBER FORTY TWO
BOBBER FORTY TWO

1.1


BOBBER FORTY TWO
BOBBER FORTY TWO

2


ORIGINAL
JAWA
1929

3


BOBBER

4


BOBBER

5


BOBBER

6


42

7

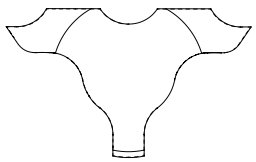

8

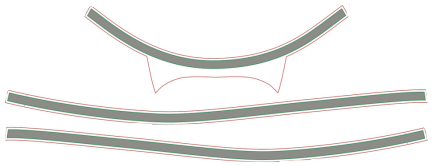

SR. NO.	PART NUMBERS	PART DESCRIPTION	FRT	QTY	REMARKS
1	T13200J30380N	DECAL WHEEL FRONT_RED	0.4	2	
1.1	T13200J30390N	DECAL WHEEL REAR_RED	0.4	2	
2	T13200KW0040N	LOGO ENGINE STARTER MOTOR COVER	0.2	1	
3	T13200J30400N	WHEEL PLAQUE_BLUE	0.4	2	
4	T13200J30410N	WHEEL PLAQUE_MYSTIQUE COPPER	0.4	2	
5	T13200J30420N	WHEEL PLAQUE_RED	0.4	2	
6	T13200J30190N	BADGE HEAD LAMP	0.2	1	
7	T13200J30440N	Y TAPE HEADLAMP BADGE	0.2	1	
8	T13200Y40070N	DECAL DUEL TANK COLOR_BOBBER UG 2.2	0.2	1	

1



LHS Side Panel Decal

2



RHS Side Panel Decal

3



4



5



6



7



8



LHS Side Panel Decal

9



RHS Side Panel Decal

10

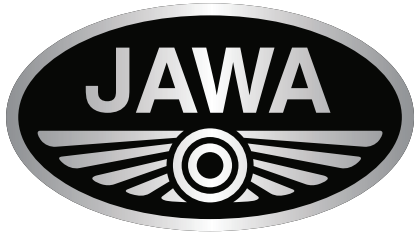

11



12



13



14



SR. NO.	PART NUMBERS	PART DESCRIPTION	FRT	QTY	REMARKS
1	T13200J30300B	DECAL SIDE PANEL LH_WHITE	0.2	1	
2	T13200J30310B	DECAL SIDE PANEL RH_WHITE	0.2	1	
3	T13200J30400N	WHEEL PLAQUE_COOL GREY	0.4	4	
4	T13200J30620L	DECAL FUEL TANK_CZ-GREY LH	0.2	1	
5	T13200J30620E	DECAL FUEL TANK_CZ-BLACK LH	0.2	1	
6	T13200J30630L	DECAL FUEL TANK_CZ-GREY RH	0.2	1	
7	T13200J30630E	DECAL FUEL TANK_CZ-BLACK RH	0.2	1	
8	T13200J30300X	DECAL SIDE PANEL LH_RED	0.2	1	
9	T13200J30310X	DECAL SIDE PANEL RH_RED	0.2	1	
10	T13200KW0820N	BADGE ENGINE COVER RH	0.4	1	
11	T13200KW0450N	DECAL WHEEL RIM FRONT	0.4	4	
12	T13200KW0460N	DECAL WHEEL RIM REAR	0.4	4	
13	T13200J30260E	DECAL FUEL TANK CENTRE_BLACK	0.2	1	
13.1	T13200J30270N	DECAL FUEL TANK CENTRE_COOL GRAY	0.2	1	
13.2	T13200J30260N	DECAL FUEL TANK CENTRE_BLUE	0.2	1	
13.3	T13200J30260X	DECAL FUEL TANK CENTRE_RED	0.2	1	
14	T13200J30450N	BADGE SEAT REAR	0.2	1	

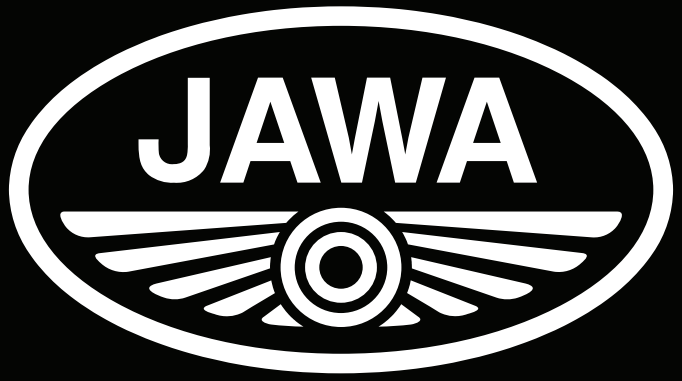

Classic Legends Pvt. Ltd.

D1 Block, Plot No. 18/2 (Part), MIDC Chinchwad, Pune - 411 019, India